□□□□

□□□□	SF-P5495
□□□□	3A
□□ □□	≤50mΩ
□□□	4.5□□
□□□□	3.0□□
□□□	150±20%gf@1□□ 3.0mm
□□□	1000PCS
□□□□	100% T/T □□□
□□□□	5-10 □ □□ □□□

□□ □□

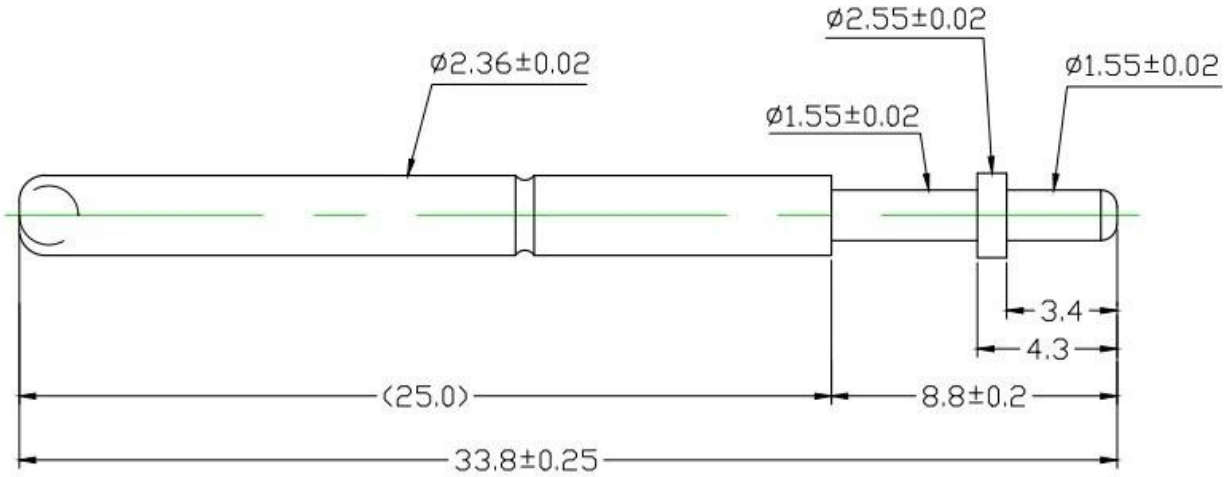

□□ □□

Production Flow (生产流程)

SFENG
The China's The World's

1. raw material warehouse

2. Lathe workshop

3. Assemble workshop

4. Quality inspection

5. Finished products

6. Packing

Measuring Equipment

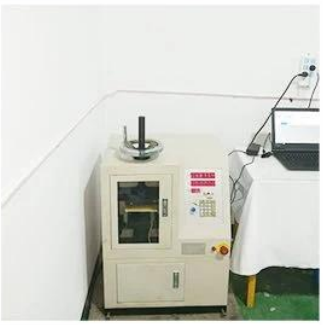

Measuring Equipment:

1. Agilent current testing;
2. Quadratic element measurement
3. Load Curve Meter
4. Bond Test
5. Life Fatigue Test

□□

SFENG®
The China'S The World's

□□ □□

DAS CERTIFICATION

CERTIFICATION

Quality Management System Certificate of Approval

This is to certify that the QMS of

Suzhou Shengyifurui Electronic Technology Co.,Ltd

Unified Social Credit Code:91320506MA1NRNLF6N

Registration Address:Room 5277 Tianlong Building, No.378 Zhujiang Nan Road, Mudu Town, Wuzhong District, Suzhou City

Business Address:Room 103 Units 2 Building 4, Xiangtihuayuan, No.567 Binhe Road, SND, Suzhou City

Has been assessed and found to meet the requirements of

GB/T 19001-2016/ISO 9001:2015

This certificate is valid for the following scope of operations:

Sales of test probes and related accessories

Date of Certificate Issue: Dec, 06, 2018

Certificate Valid Until: Dec, 05, 2021

Certificate Number: **QM291812020**

The validity of the registration will be continued only when the organisation pass the annual surveillance audit.

Check the validity of certificate at www.cnca.gov.cn or www.das-china.com

Surveillance Audits:

Authorized by: *Chief Executive*

SHANGHAI D.A.S CERTIFICATION CO.,LTD. 上海达卫师认证有限公司

Shanghai DAS Certification Co., Ltd. , member of SN Registrars(Holdings) Ltd.

Add:505, Tower. 2, Guoson Center, No. 388, Zhongjiang Road, Shanghai, P.R.China, 200062
Tel: 0086-21-62773910 Fax:0086-21-62080319
Web:http://www.das-china.com
Email: info@das-china.com
UK Head Office:**DAS Certification Limited (On Behalf of SN Registrars (Holdings) Limited)**
ADD: Registration House,22b Church Street,Rushden, Northamptonshire, NN10 9YT, UK
Tel:+44(0)1933 381859
Email: info@dascertification.co.uk
Web: www.dascertification.co.uk
Company Number : 07659067

MEMBER OF MULTILATERAL RECOGNITION ARRANGEMENT IAF

ISO 9001: 2015

Member of SN Registrars (Holdings) Ltd

UKAS MANAGEMENT SYSTEMS 8327

1.□□ □□ □□□□□□□ PCB□ICT□FCT□□ □□
2.Pogo pin□□□□□□□□ □□□□□□□□□□□ □□ □□□ □□□□□□□□□□□□□□□□□ □□□
3.□□“BGA”□“□□□”□□□□□□□□
4.□□□□□□□□□□□LM□□QZ□VZ□□□
5.□□□□□□□□□□□□□□□
6.□□&□□/□□□
7.□□□□□□□□□□□□□POM□□

□□

□□□ □□

1.□□□□□“24”□□□□□□□“□□”□□□
2.□□□□“□□”□“OEM”□
3.□□□□□“□□”□“□□”□“□□□□”□“□□□”□□□□“□□”□
4.□□□□□“□□□”□□□□“□□”□□□□“□□□”□□□□