□□□□

□	ENG
□□	□□□□□□□□
□□	□□
□□	□□
□□	SUS303
□□	□□□
□□□□	□□□
□□□□	□□□
□□□□	□□
□□	□□
□□□□	□□
□□□	100
□□□□	□□□□□15□

□□□□□

SFENG
The China's The World's

□□□□

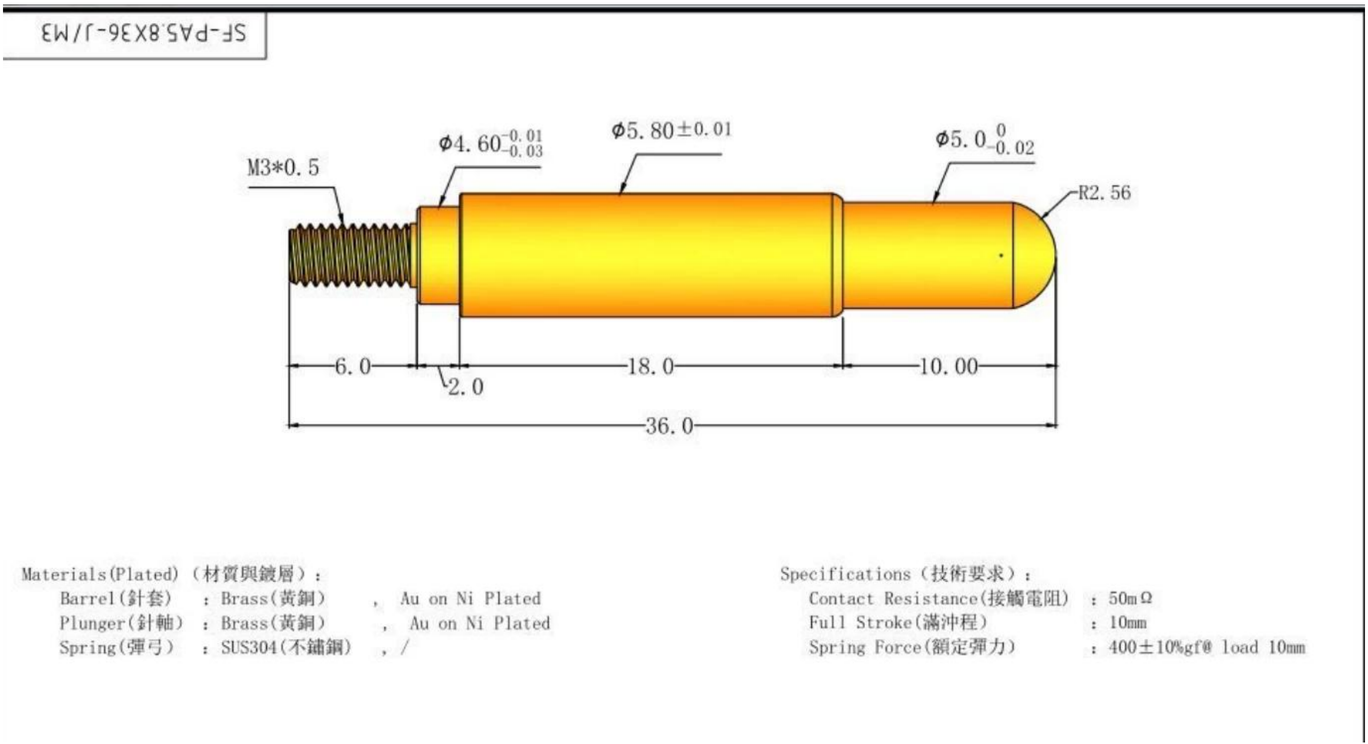

[illegible]

1.[illegible]

2.[illegible]

3.[illegible]

4.[illegible]

[illegible]

PCB[illegible]ICT[illegible]FCT[illegible]

[illegible]

BGA[illegible]

[illegible]LM[illegible]QZ[illegible]VZ[illegible]

[illegible]

[illegible]/[illegible];

[illegible]30[illegible]OK[illegible]POM[illegible]

[illegible]

1. Raw material warehouse

2. Lathe workshop

3. Assemble workshop

4. Quality inspection

5. Finished products

6. Packing

[redacted]

1. Agilent current testing

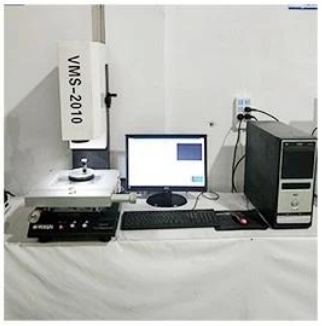

2. Quadratic element

3.Load Curve Meter

4.Bond Test

5.Life Fatigue Test

6.Microscope

[redacted]

Standard products will be delivered out within 3 days. Customized products will be sent out within 15 days.