□□□□□

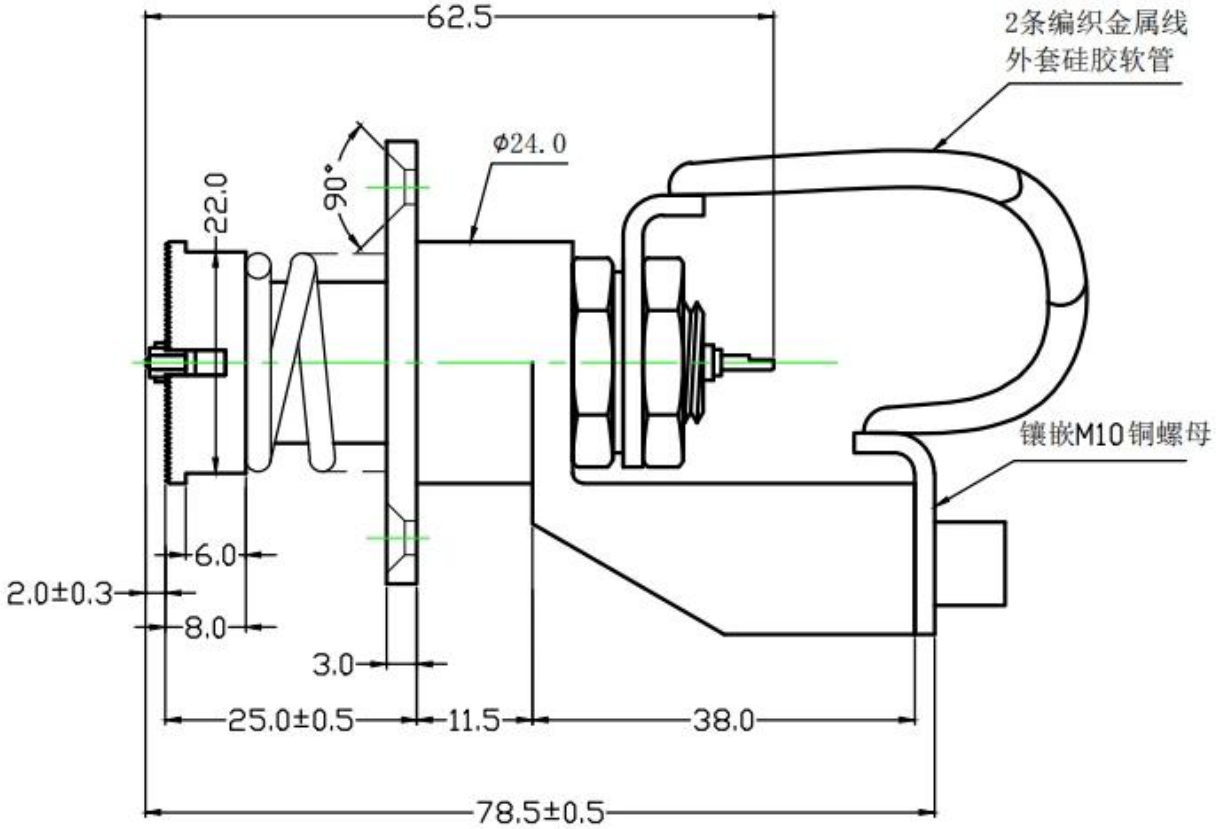
62.5
2条编织金属线
外套硅胶软管
Φ24.0
90°
22.0
镶嵌M10铜螺母
6.0
2.0±0.3
8.0
3.0
25.0±0.5
11.5
38.0
78.5±0.5

□□□□□□

Production Flow (生产流程)

SFENG
The China's The World's

1. raw material warehouse

2. Lathe workshop

3. Assemble workshop

4. Quality inspection

5. Finished products

6. Packing

Measuring Equipment

Measuring Equipment:

1. Agilent current testing;
2. Quadratic element measurement
3. Load Curve Meter
4. Bond Test
5. Life Fatigue Test

[illegible] [illegible]

1.PCB[illegible]ICT[illegible]FCT[illegible];

2.[illegible]2[illegible]

3.BGA [illegible] [illegible] [illegible]

4.Universalbingpinbingwithoutbingspring[illegible]coatingbingpin[illegible]LMbingpinbingwith[illegible]QZbing[illegible]VZbing[illegible];

5. [illegible] kV [illegible] kV [illegible] [illegible] [illegible]

6.Terminal&receptacle/socket;

7.[illegible]POM[illegible]

[illegible]

[illegible]

Suzhou Shengyifurui Electronic Technology Co.，Ltd **1984** 50

1. 24 ;

2. bingdesign OEMbing ;

3.

4.