□□□□□

□□□□	SFENG
□□□□	□□□□□□□□SF-PV1- H H M7 * 44.5MM
□□□□□□	□□□□□□□
□□□□□□	□□□□□□□□□7□□□

□□□□

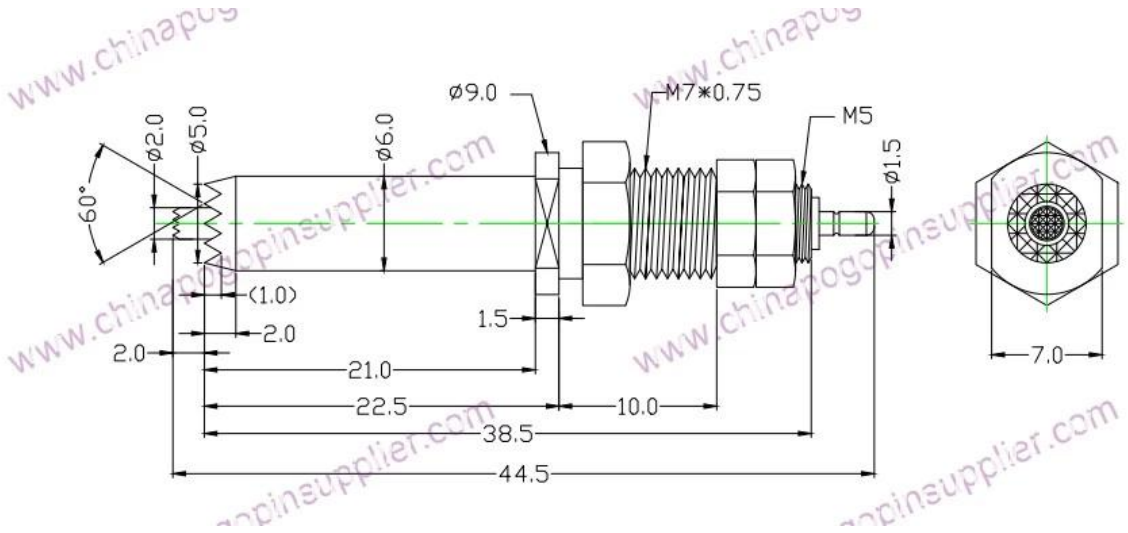

□□□□□□□□

1.□□□24□□□□□□□□yourinquiry□□□□□□□□□□□□

2. Customizeddesign□□□□□□□OEM□□□□□□□□□

3.□□□□□□□□□□□□□□□□□□□□□□□□□□□□□□□□□□□□

4.□□□□□□□□□□□□□□□□□□□□□□□□□□□□□□□□□□□□

□□□□

PCB□ICT□FCT□□□□□□□□□□□□□□□□□□□□□□□□□□□□;

□□2□□□□□□□□□□□□□□□□□□□□□□□□□□□□□Pogo□□□□□□□□□□□□

BGA□□□□□□□□□□□□□□□□□□□□□□□□□□□□

□□□□□□□□□□□□□□□□□□□□□□□□□□□□□□□□□□□□QZ□□□VZ□□□□□□LM□□□

□□□□□□□□□□□□□□□□□□□□□□□□□□□□;

□□&□□□□□□□/□□□□;

□□□□□□□□□□□□□□□□30□OK□□□□□□□□□□□□□POM□□□□□□□□□□□□

□□□□

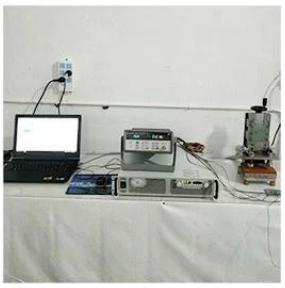

1. Agilent current testing

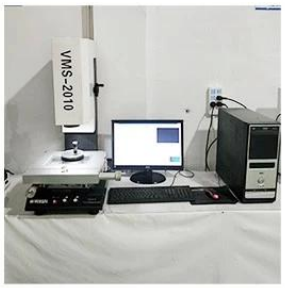

2. Quadratic element

3.Load Curve Meter

4.Bond Test

5.Life Fatigue Test

6.Microscope

□□□□□□□

Standard products will be delivered out within 3 days. Customized products will be sent out within 15 days.