□□□

□□□□	SFENG
□□	□□□□□□□□
□□□□□□	□□
□	□□
□	SUS303
□□□	□□□□□□□□□
□□□□□	□□□□□□□□□
□□□□□□□	□□□□□□□□□
□□□□	□□
□□	□□
□□□□	□□
MOQ	100
□□	□□□□□15□

□□□□□□

SFENG
The China's The World's

□□□□□□

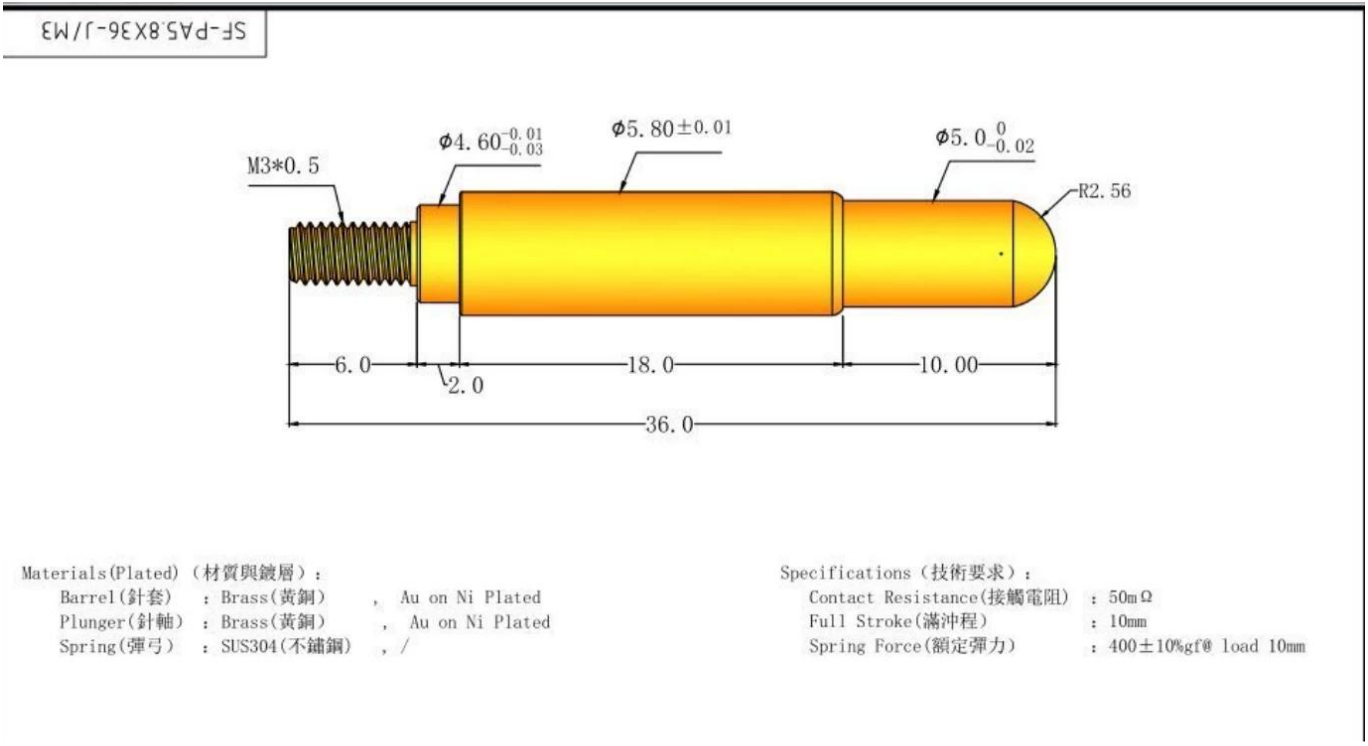

□□□□□□□

1.□□□□□□

2.□□□□□□□□□□□□□□□□

3.□□□□□□□□□□□□□□

4.□□□□□□□□□□

□□□□

PCB□ICT□FCT□□□□□□□□□□□□□□

□□□□□□□□□□□□□□□□□□□□□□□□2□□

BGA□□□□□□□□□□□□□□□□□□□□□□

□□□□□□□□□□□□□□□□□□□□□□□□□□□LM□□QZ□□□VZ□□□□□

□□□□□□□□□□□□□□□□□□□□□□□□□;

□□□□□□□;□□□□/□□□□;

□□□□□□□□□□□30□OK□□□□□□□□□□POM□□□□□□□□□□

□□□□

1. Raw material warehouse

2. Lathe workshop

3. Assemble workshop

4. Quality inspection

5. Finished products

6. Packing

□□□□

1. Agilent current testing

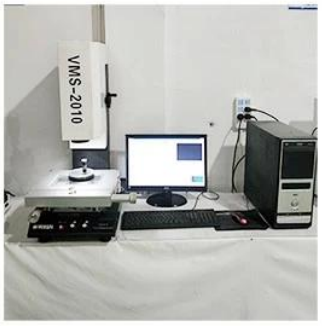

2. Quadratic element

3.Load Curve Meter

4.Bond Test

5.Life Fatigue Test

6.Microscope

□□□□□

Standard products will be delivered out within 3 days. Customized products will be sent out within 15 days.