□□□:SF □□□□ □□

□□□□□□

□□□□□□□Cu□Rh□□□

□□□:□□□□□□□

□□:□□□□□

□□□□□

SFENG
The China's The World's

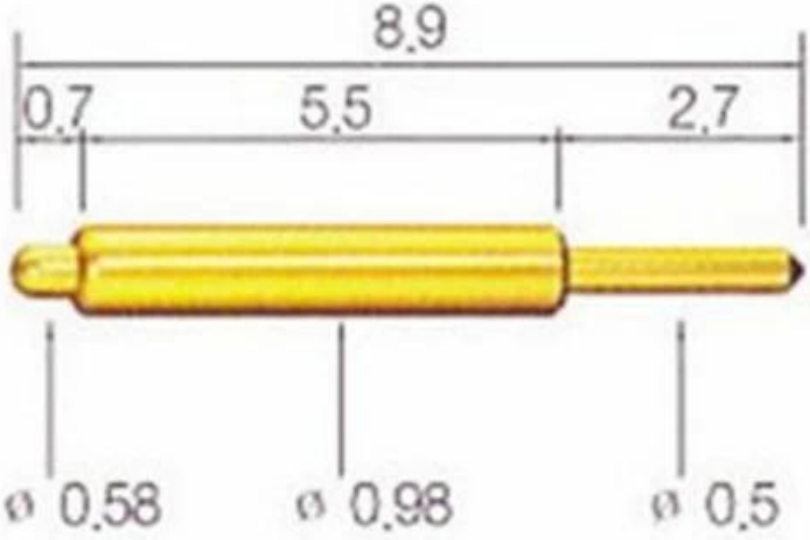

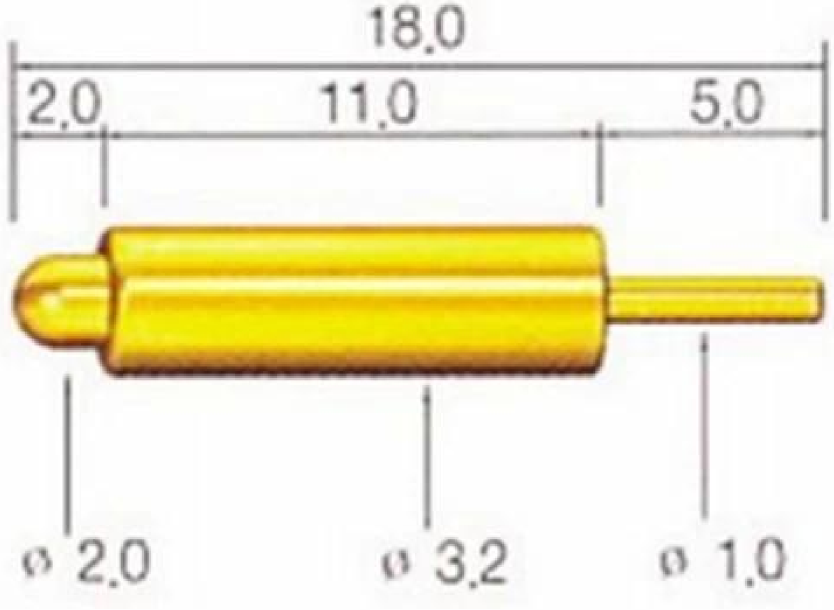

• [illegible]
• [illegible]

ShengFeng [illegible]

[illegible]1984[illegible]Shengfeng Probe[illegible]Shengteng Electronic Co.[illegible]Ltd[illegible] [illegible]

[illegible]

1.[illegible]30[illegible]

2.[illegible].

3.we [illegible]

4.we [illegible]

[illegible]

[illegible]
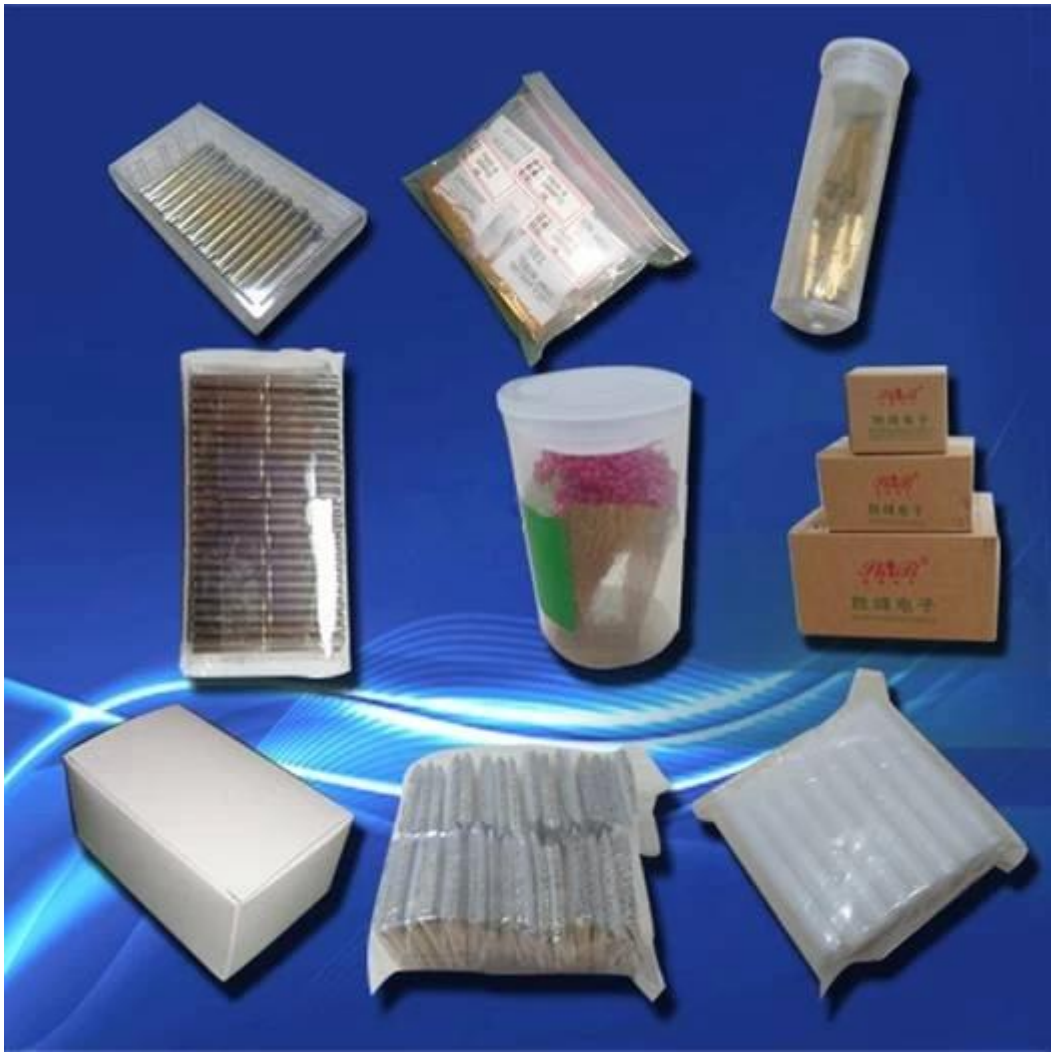
Spring exhausted tester	DC power supply	Current resistance tester
Microscope	Tensile strength tester	Spring tester