□□□□□□□60A□□□□□□□□

□□ □□	**6** □□□□□□□0A□□□□□□□□
□□□□ □□□□	**SF6009**
□□	□□ □□ **BeCu** □□ □□□□
□□□	□□□□□□□□□□□□ □□□
□□□ □□	**60A**
□ □	**5000g ±20%**

□□□□

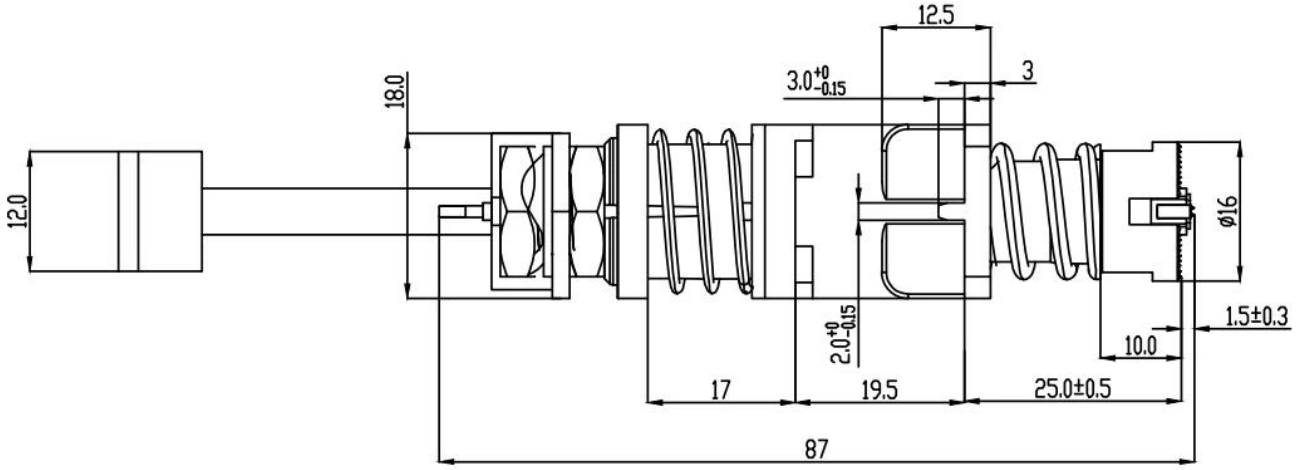

SFENG
The China's The World's

[illegible]

1. 24 [illegible]

2. [illegible]OEM [illegible]

3. [illegible]

4. [illegible]

[illegible]

PCB[illegible]ICT[illegible]FCT [illegible] ([illegible])[illegible]

[illegible] [illegible] ([illegible]) [illegible] 2 [illegible]

BGA[illegible]

□□□□□□□□□□□□□□□□□□□□□□□□□□□□□□QZ□□□VZ□□□□□□□LM□□□

□□□□□□□□□□□□□□□□□□□□□□□□□;

□□□□□□□□□□□□□/□□□□;

□□□□□□□□□□□□30# OK □□□□□□□□□□□□POM□□□□□□□□

□□□□

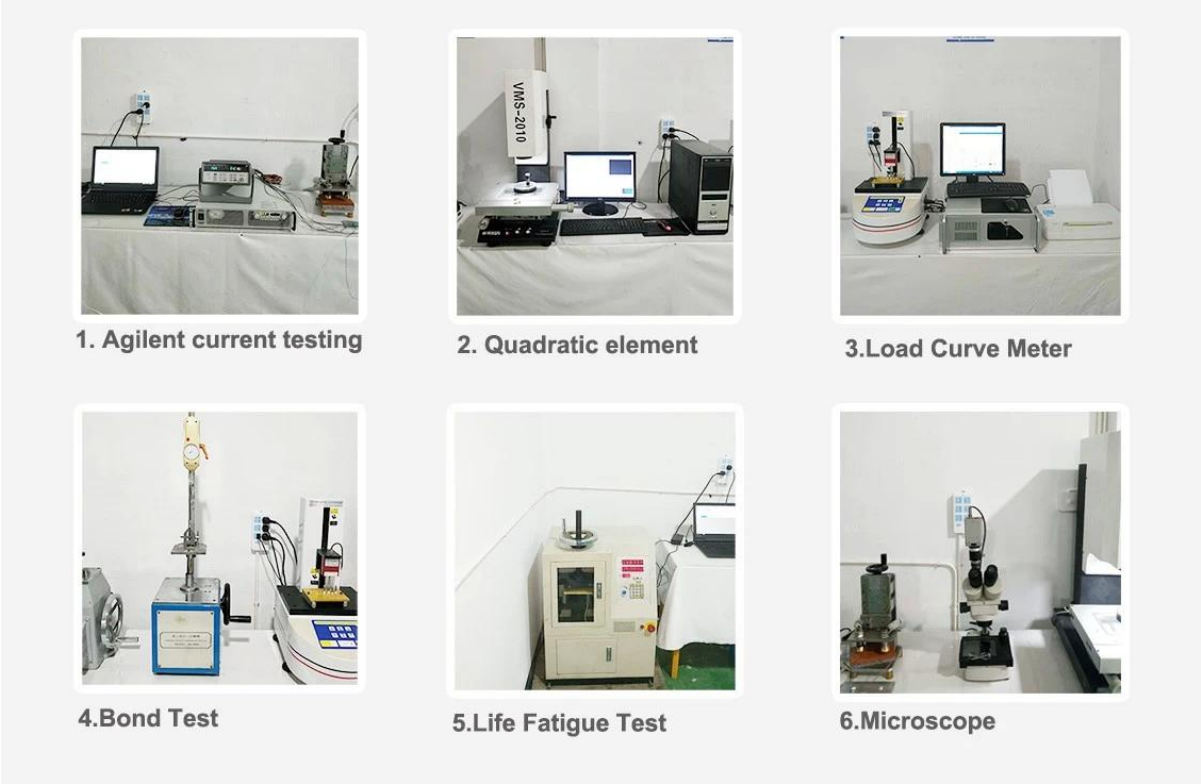

□□□□□□□□

Standard products will be delivered out within 3 days. Customized products will be sent out within 15 days.