□□□□

□□□□	SF3147
□□□□□□□□	□10mm
□□□	200gf@□□5.0mm
□□□□□□	□□□□□□□□□□□
□□	□□□□□□□□□□□
□	SUS304
□□□□□□□□□□□□	OEM □ ODM
MOQ	100□
□□□□□	□□□□□□□□□□□□□
□□□	100% T/T□□□
□□	□□□□□□□□□□□ 5 □ 10 □

□□ □□□□□

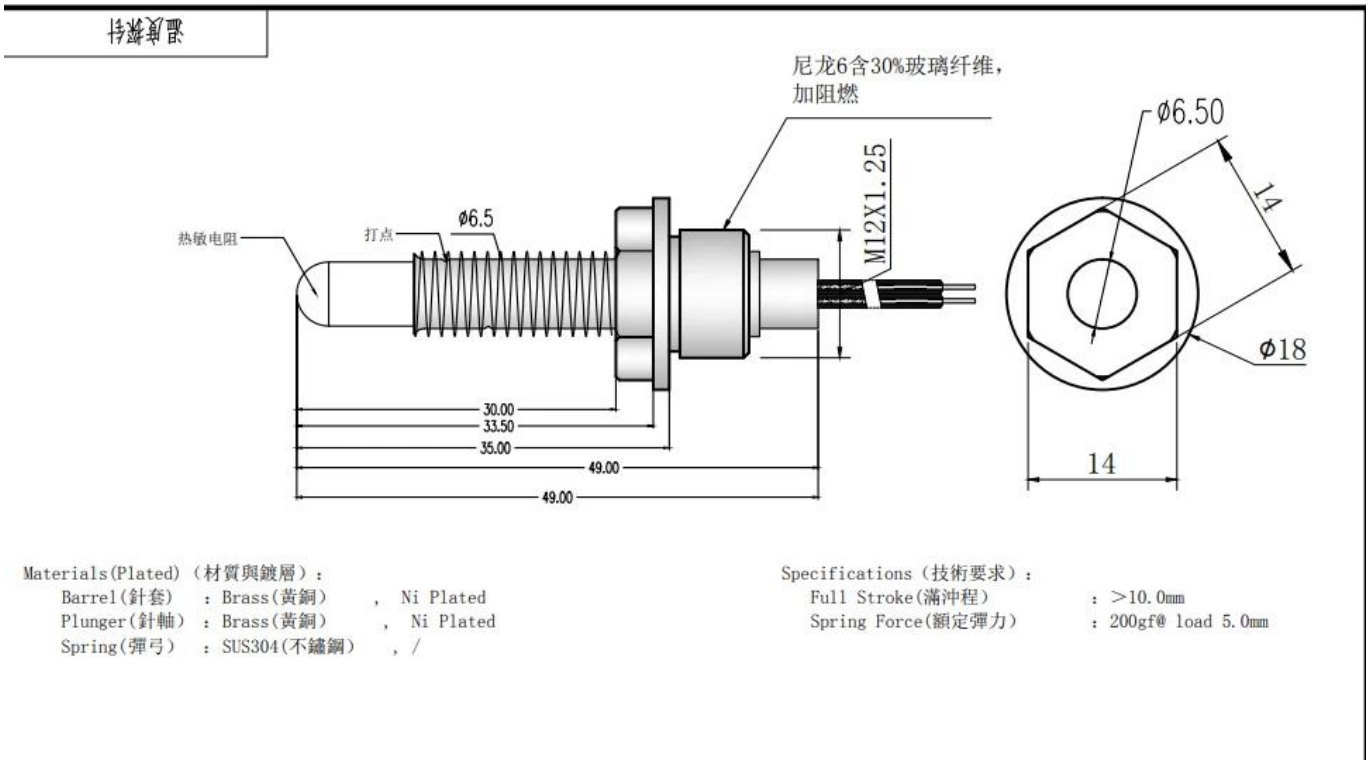

□□ □□

Production Flow (生产流程)

SFENG
The China's The World's

1. raw material warehouse

2. Lathe workshop

3. Assemble workshop

4. Quality inspection

5. Finished products

6. Packing

Measuring Equipment

Measuring Equipment:

1. Agilent current testing;
2. Quadratic element measurement
3. Load Curve Meter
4. Bond Test
5. Life Fatigue Test

□□ □□

1.PCB□ICT□FCT□□□□□□□□□□□□□□□□(□□□□);
2. □□□□ (□□□□) □□□□□□□□□□□□□□□□□