□□□

□□□□	SFENG
□□	SF□□3.2X6.5
□□□□□□	□□
□	□□
□□□□□□□□□□	Becu
□□□	□□
□□□□	□□
□□□	□□□□
□□□□	□□
□□	□□
□□□□	□□
MOQ	5000
□□	□□□□□15□

□□□□□□

□□□□

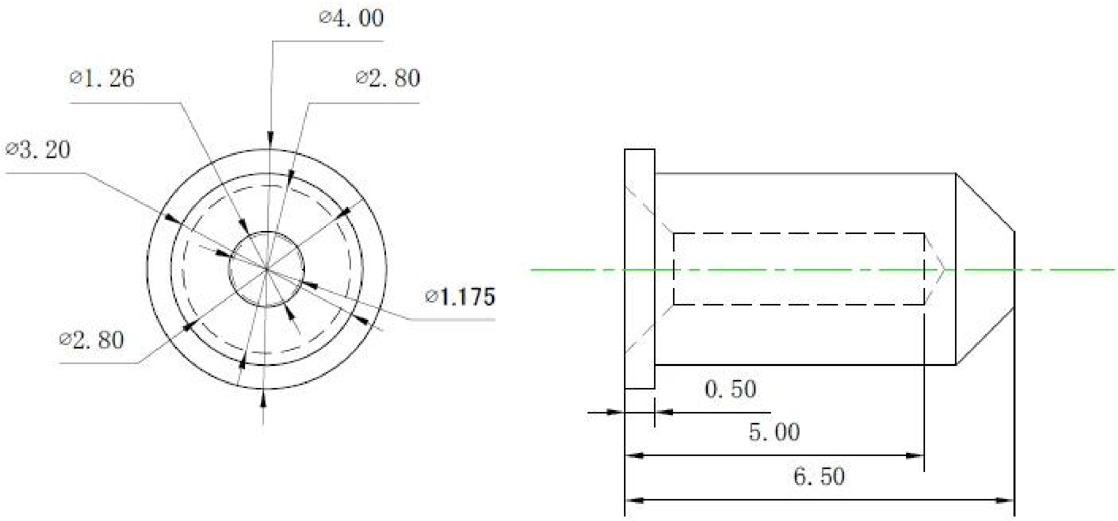

□□□□□

1.□□□□

2.□□□□□□□□□□□

3.□□□□□□□□

4.□□□□□□□

□□□

PCB□ICT□FCT□□□□□□□□□□;

□□□□□□□□□□□□□□□2□□□□□□□□□□□□□□□□□□□□□□□□□□□□□□□□□

BGA□□□□□□□□□□□□□□

□□□□□□□□□□□□□□□□□LM□QZ□□VZ□□□

□□□□□□□□□□□□□□□□;

□□□□;□□□/□□□;

□□□□□□□□□30□OK□□□□□□□POM□□□□□□□

□□□

1. Raw material warehouse

2. Lathe workshop

3. Assemble workshop

4. Quality inspection

5. Finished products

6. Packing

□□□□

1. Agilent current testing

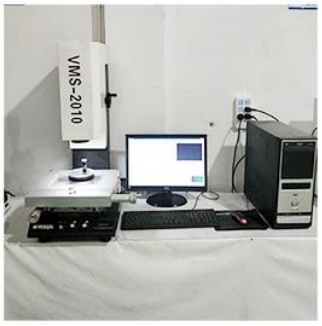

2. Quadratic element

3.Load Curve Meter

4.Bond Test

5.Life Fatigue Test

6.Microscope

□□□□□

Standard products will be delivered out within 3 days. Customized products will be sent out within 15 days.