□□□□□

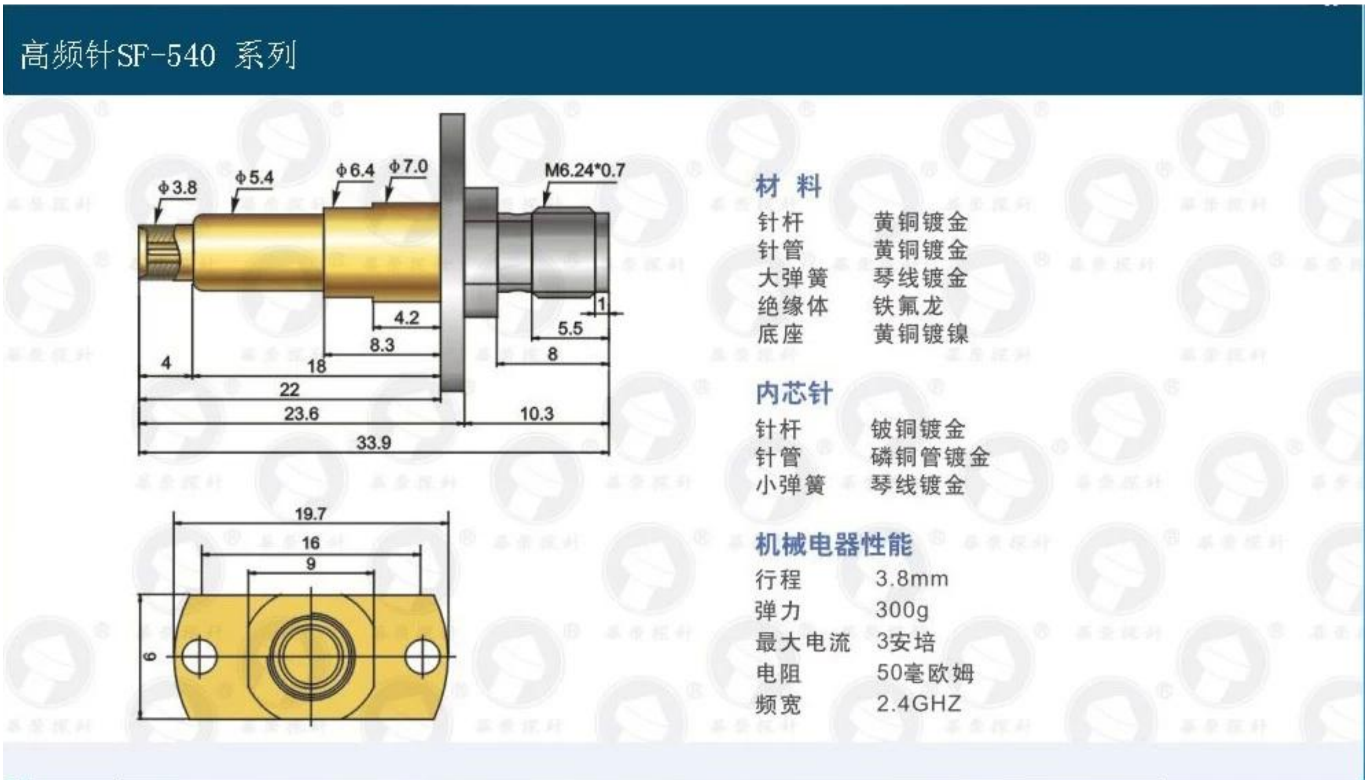

□□□□□□□

1. □□□□ 24 □□□□□□□□□□□□□
2. □□□□□ □□□□□□□□□□OEM □□□□□□□□
3. □□□□□□□□□□□□□□□□□□□□□□□□□□□□□□
4. □□□□□□□□□□□□□□□□□□□□□□□□□□□□□□□

□□□□

□□□□□ □ □□□ □ □□ (□□□□) □□□□□□□□□□□FCT □□□□;
□□□□ (□□□□)□2 □□;□□□□□□□□□□□□□□□□□□□□□
□□□□ □□□□□□□ □□□□ BGA □□□□□□□□;
GM □□□□□□□□□LM □□ QZ□VZ □□□□; □□□□
□□□□ □□□□□□□□□□□□□□□□□□□□□□□□□;
□□□□□□□/□□□□;
□□□□□□□□□□□□□□□□□Pom□□□□□□□□ 30 # [ok] □

□□□□□□□□

Spring exhausted tester	DC power supply	Current resistance tester
Microscope	Tensile strength tester	Spring tester