□□□□

□□□□	SF0894
□□□	□□6.0×20.03mm
□□	□□□□□□:Becu□Au on□□□□Ni □□□ □□□:□□□□□□□□□□□□□□□□□□□□ □□□□□:SWP
□□□□□□□	6.0mm
□□□□□□□	4.8mm
□□□	1000±20%gf@load 4.8mm
MOQ	100□
□□□	T/T
□□	□□□□□□□□□□□□ 5 □ 15 □

□□ □□□□□

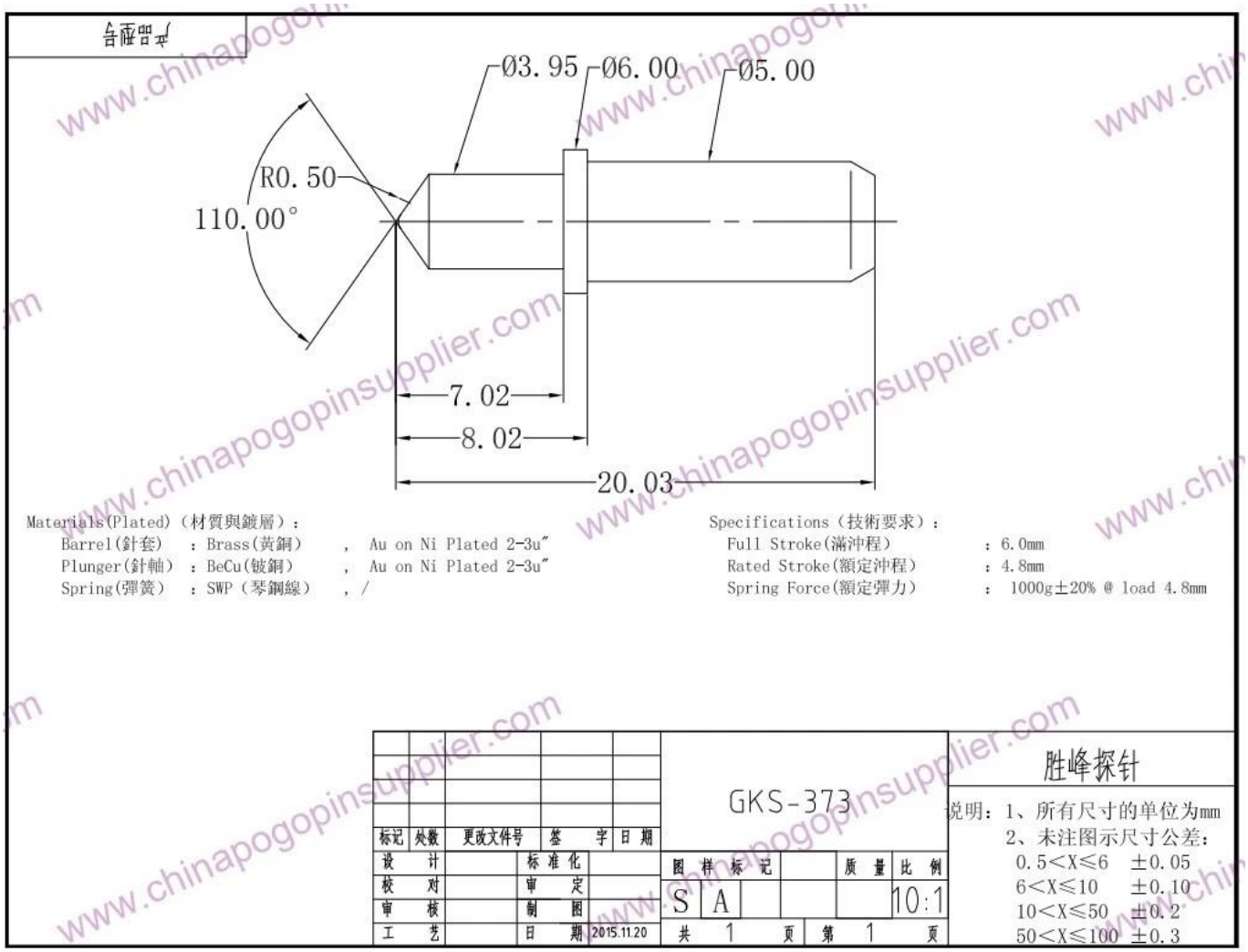

□□ □□

Production Flow (生产流程)

SFENG
The China's The World's

1. raw material warehouse

2. Lathe workshop

3. Assemble workshop

4. Quality inspection

5. Finished products

6. Packing

Measuring Equipment

Measuring Equipment:

1. Agilent current testing;
2. Quadratic element measurement
3. Load Curve Meter
4. Bond Test
5. Life Fatigue Test

□□ □□

1.PCB□ICT□FCT□□□□□□□□□□□□□□□□(□□□□);
2. □□□□ (□□□□) □□□□□□□□□□□□□□□□□