□□ □□: SF □□□ □

□□ □ □□

□□□: Cu, □□□□ Rh □□□□□

□□:□□, □□□

□□□:□□□□□□□

□□

SFENG
The China's The World's

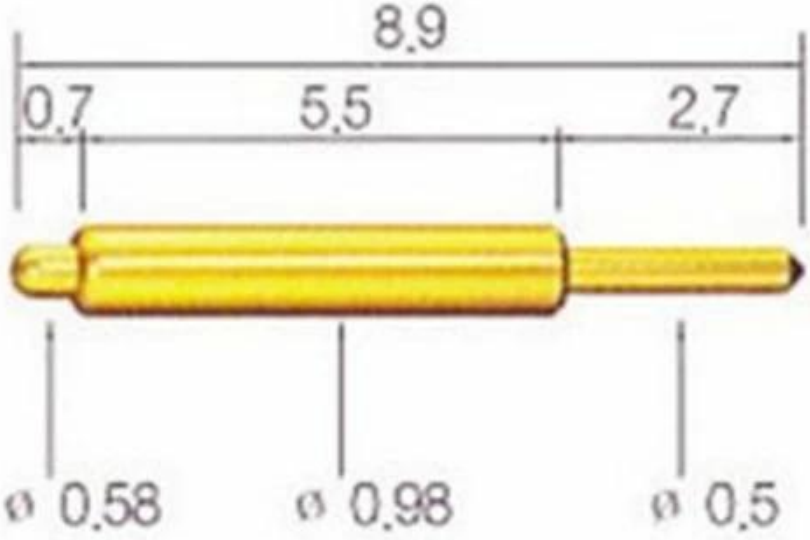

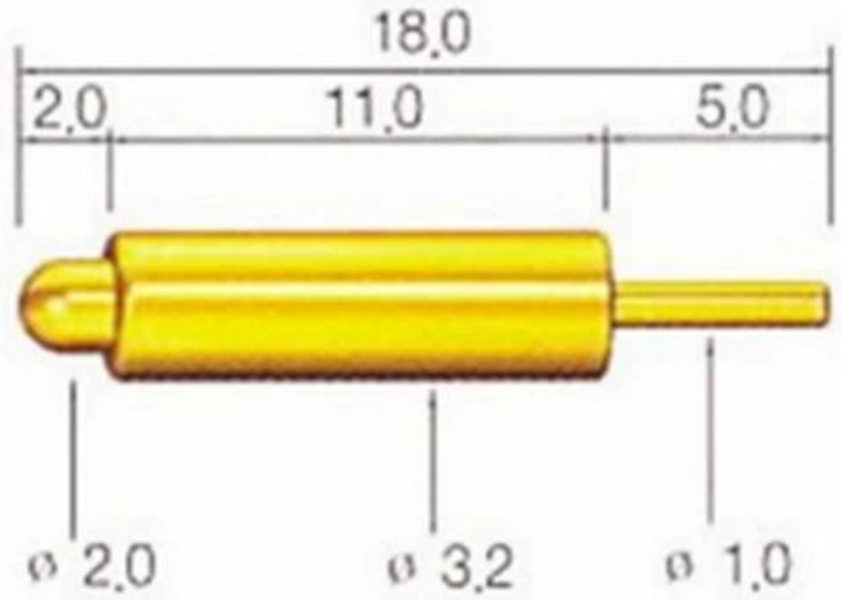

- □□□ □□□ □ □□ □□ □
- □□□ □□□ □□□ □□□, pls □□□ □□

ShengFeng □□□

□□ □□□ 1984□ Shengfeng Probe, Suzhou Shengteng Electronic Co., Ltd□ □□□□□ □□□ □□□ □ □□ □ □ □□□ □□, □□ □□ □ □□□ □□□□ □□□□ □□□ □□□ □□ □□ □□□□□□.

□□□ □□

1. □□□ □□ □□ □□ □□□ 30 □ □□ ourself □□□ □□□□.
2. □□□ □□ □□□ □□□□ □□□ □□□ □□□□.
3. □□□ □□□ □□□□ □□□ □□□ □ □□□□.
4. □□□ □□□ □□□ □□ □□□□ □□□□□.

□□ □□

□□□ □□

Spring exhausted tester	DC power supply	Current resistance tester
Microscope	Tensile strength tester	Spring tester
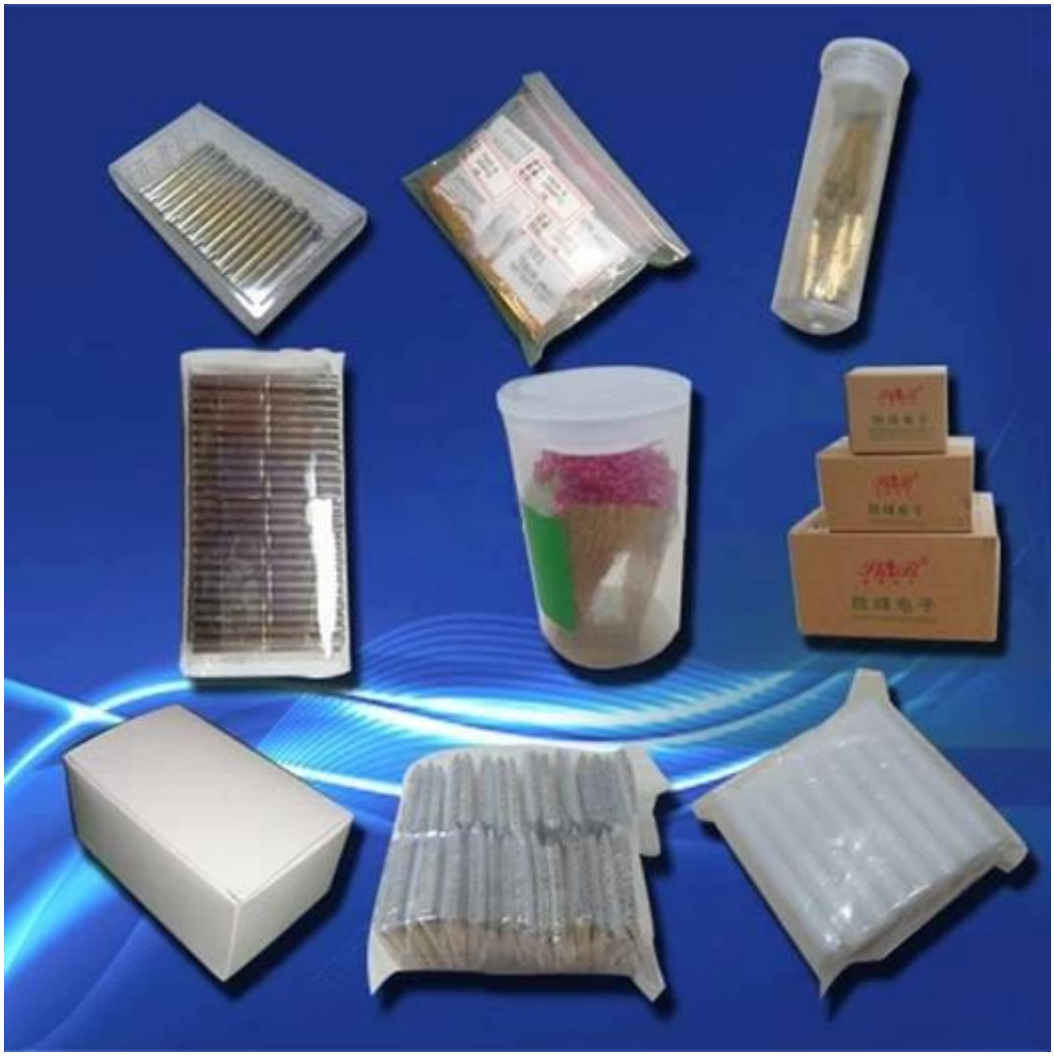
□□□ □□□