□□ □□

□□ □□	SF6324
□□□□□	≥9mm
□□□ □	□□ □:2500g±20% load 5mm □□ □:600±20% load 5mm
□□□□ □□	OEM & ODM
MOQ	100PCS
□□□	Plastic bag, carton box
□□	□□ □ 100% T/T
□□ □□	□□□□ □□ □ 5~10□

□□ □□

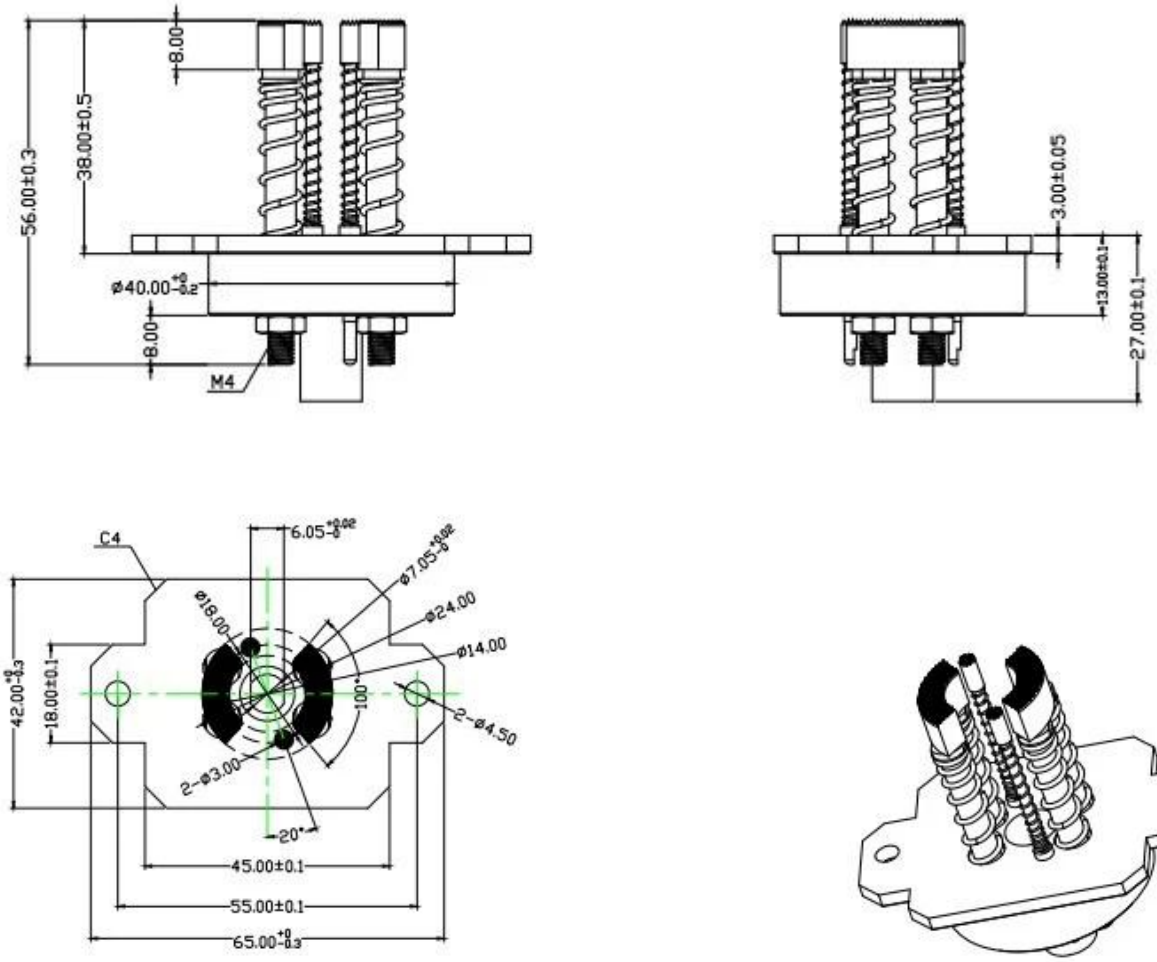

□□ □□

Production Flow (生产流程)

SFENG
The China's The World's

1. raw material warehouse

2. Lathe workshop

3. Assemble workshop

4. Quality inspection

5. Finished products

6. Packing

Measuring Equipment

Measuring Equipment:

1. Agilent current testing;
2. Quadratic element measurement
3. Load Curve Meter
4. Bond Test
5. Life Fatigue Test

□□ □□

1. PCB, ICT, FCT □□□ □□ □□ □□□ □□ □(□□);
2.□□, □□ □□, □□□, □□□ □ □□□□□ □□□□□□□ □□ □ □□ □□□ □□ □□ □□□ □□□ □□□□ □□ □(□□□);
3.BGA □ □□□ □□□□ □□ □□ □□ □□□;
4.□□□□ □□ □□ □, □□ □, QZ □ VZ □□□□ □□ LM □;
5.□□□ □□□, □□□ □□□, □□□□□ □□;
6. □□□ □ □□□/□□;
7. □□ □□ □□ □□, □□ □□ □□, POM □ □.

□□□ □□□□ □□ □□ □□□□ □□□ □□□□. □□□ □□□ □□ □□□ □□□ □□ □□□ □□□□□ □□ □□□ □□ □□□ □□□□.

□□□ □□□

1.□□□ □□□ □□□ □□□□ 24□□ □□□ □□□ □□ □ □□□□.
2. □□□ □□□□ □□□□ OEM□ □□□□□.
3.□□□ □ □□ □□□□ □□□ □□□□ □□□ □□ □□□ □ □□□□.
4.□□□ □□□□ □□□□ □□□ □□ □□□□ □□□ □ □□□□.