□□□□ 60A □□□ □□□

□□ □□	**6 □□□□ 0A □□□ □□□**
□□ □□□.	**SF6009**
□□	**□□ □□ BeCu □□ □□**
□□	**Au or □□ □□**
□□ □□	**60A**
□ □	**5000g ±20%**

□□ □□

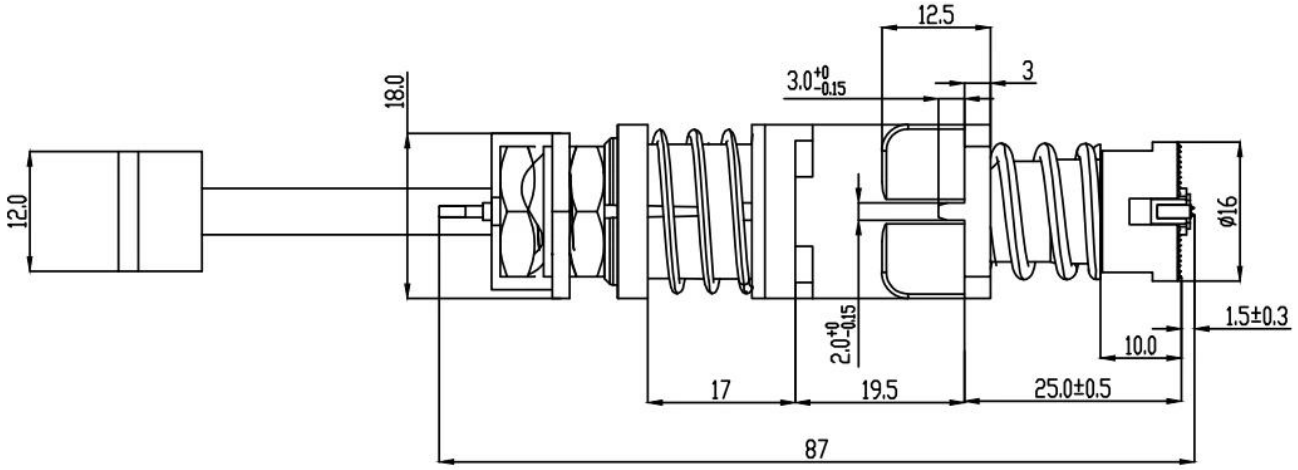

SFENG
The China's The World's

□□□ □□□

1. □□ □□ 24□□ □□□ □□□ □□□ □□□ □ □□□□.

2. □□□ □□□ □□□□ OEM□ □□□□□.

3. □□□ □□□ □□□□ □ □□ □□□□ □□□ □□ □□□ □ □□□□.

4. □□□ □□□ □□□□□□□ □□□ □□□ □□ □□□□ □□□ □ □□□□.

□□ □□

PCB, ICT, FCT □□□ □□ □□ □□□ □□ □(□□);

□□, □□ □□, □□□, □□□ □ □□ □□ □□□□□□□ □□ □ □□ □□ □□ □□ □□□ □□□ □□□□ Pogo □(□□□);

BGA □ □□□ □□□□ □□ □□□;

□□□□ □□ □□ □, □□ □, QZ □ VZ □□□□ □□ LM □;

□□□ □□□, □□□ □□□, □□□□□ □□;

□□□ □ □□□□ /□□;

□□ □□ □□ □□, 30# OK □□□, □□ □□ □□, POM, □ □□ □

□□ □□

1. Agilent current testing

2. Quadratic element

3.Load Curve Meter

4.Bond Test

5.Life Fatigue Test

6.Microscope

□□ □□

Standard products will be delivered out within 3 days. Customized products will be sent out within 15 days.