□□ □□

□□	SFENG
□□ □□	SFM365 105 400 A8001
□□□	□□ □□ Becu, □ □□ □□ □□
□	□□, □ □□ □□ □□
□	SK4, □□ □□□
MOQ	100PCS
□□ □□	7 □□□□□ □ □□□

□□ □□

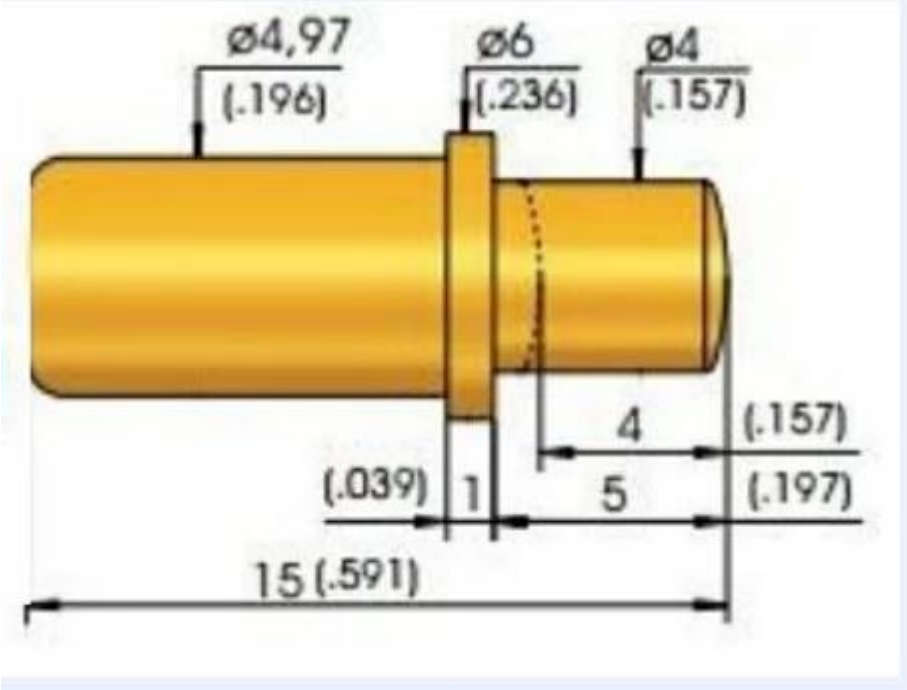

□□□ □□□

1.Reply 24 □□ □□ □□□ □□

2.Customized □□□□ □□□□, OEM □□

3.Delivery □□□ □□□□ □ □□ □□□□ □□□ □

4.provide □□□ □□□□ □□ □□ □□ □□

□□ □□

--- □□□ □ □ PCB, ICT, FCT □□□□□□ (□□)

--- □□ □ (□□□) □□ (usuallytemporary) □□□ □□□□ □

□ , □□ □□□, □□□ & A □□□□□ □□ □□ □□;

interconnectApplications;

--- □□ □□ probef orBGA & A; semiconudtion □□□;

--- □□ □ □□□, coatingpin, LM □ withQZ & A; VZseries;

--- □□ □□ □□□, □□□ □□□, □□ □□ ...

--- □□□ & A, □□ / □□;

--- □□ □□ □□ compents, 30 # OKwire, □□ □□ □□, POM, Ironhinge □

□□ □□

Spring exhausted tester	DC power supply	Current resistance tester
Microscope	Tensile strength tester	Spring tester

□□ □□

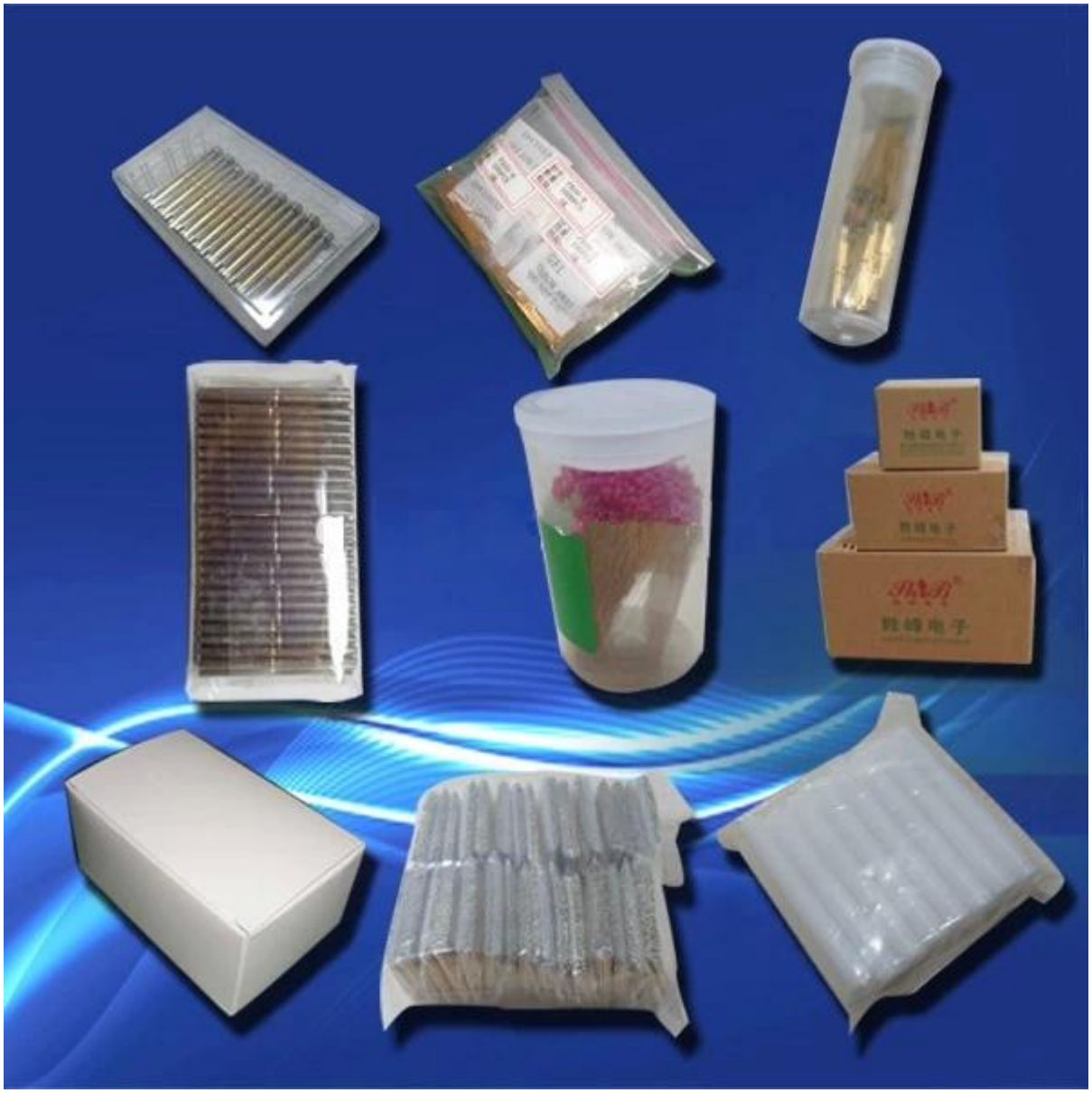
胜峰电子