□□□□ 200A □□□ □□□

□□ □□	**20 0A □□□ □□□**
□□ □□□.	**SF-24.0*85.0**
□□	□□ □□
□□	□□ □□□ □□□
□□ □□	**200A**
□ □	**10.0kg @ □ 5.0mm**

□□ □□

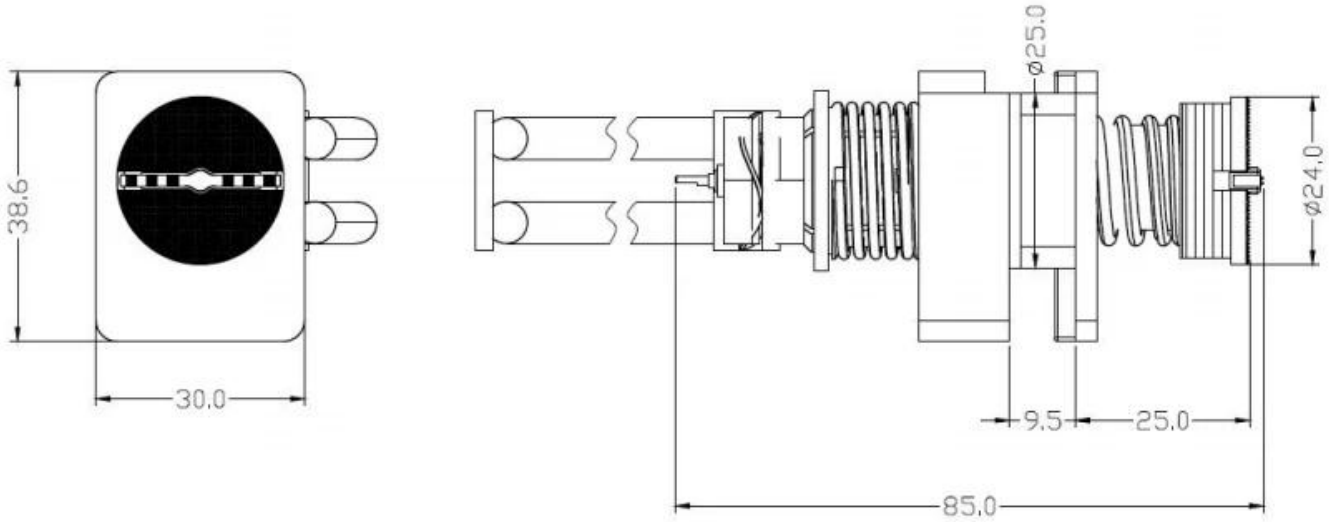

□□□ □□□

1. □□ □□ 24□□ □□□ □□□ □□□ □□□ □ □□□□.

2. □□□ □□□ □□□□ OEM□ □□□□□.

3. □□□ □□□ □□□□ □ □□ □□□□ □□□ □□ □□□ □ □□□□.

4. □□□ □□□ □□□□□□□ □□□ □□□ □□ □□□□ □□□ □ □□□□.

□□ □□

PCB, ICT, FCT □□□ □□ □□ □□□ □□ □(□□);

□□, □□ □□, □□□, □□□ □ □□ □□ □□□□□□□ □□ □ □□ □□ □□ □□ □□□ □□□ □□□□ Pogo □(□□□);

BGA □ □□□ □□□□ □□ □□□;

□□□□ □□ □□ □, □□ □, QZ □ VZ □□□□ □□ LM □;

□□□ □□□, □□□ □□□, □□□□□ □□;

□□□ □ □□□□ /□□;

□□ □□ □□ □□, 30# OK □□□, □□ □□ □□, POM, □ □□ □

□□ □□

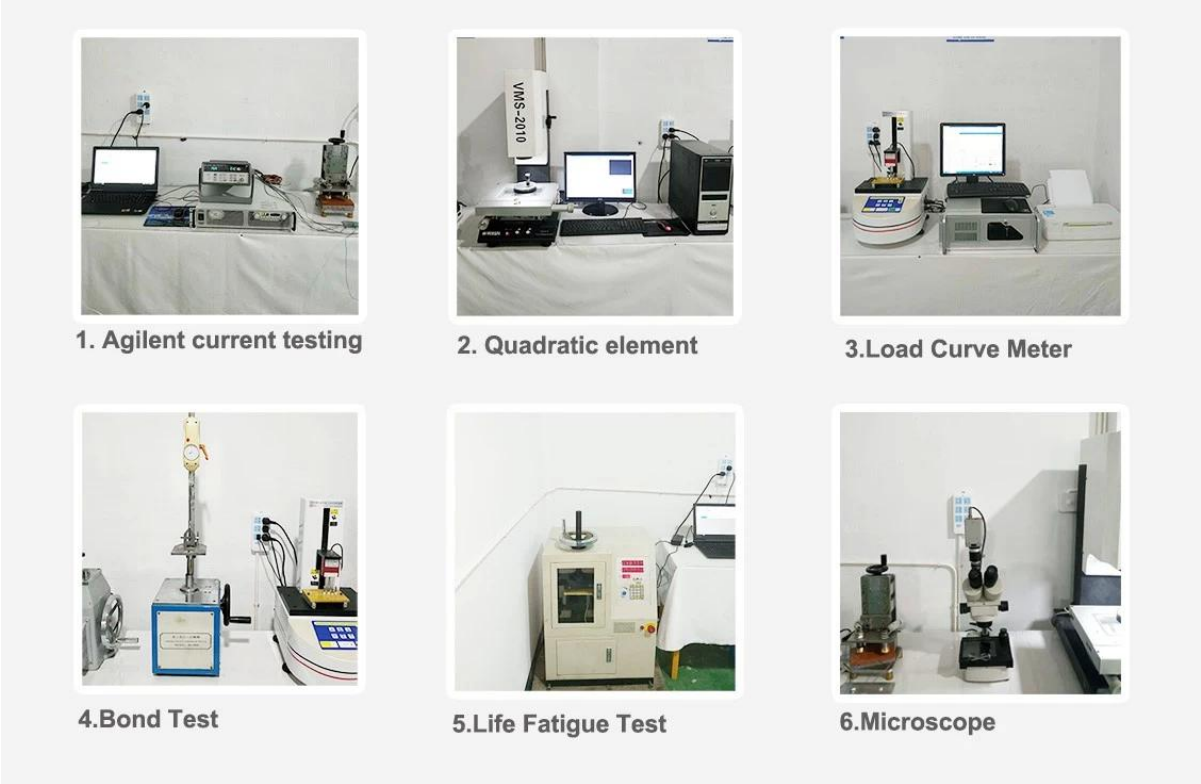
VMS-2010
1. Agilent current testing
2. Quadratic element
3.Load Curve Meter
4.Bond Test
5.Life Fatigue Test
6.Microscope

□□ □□

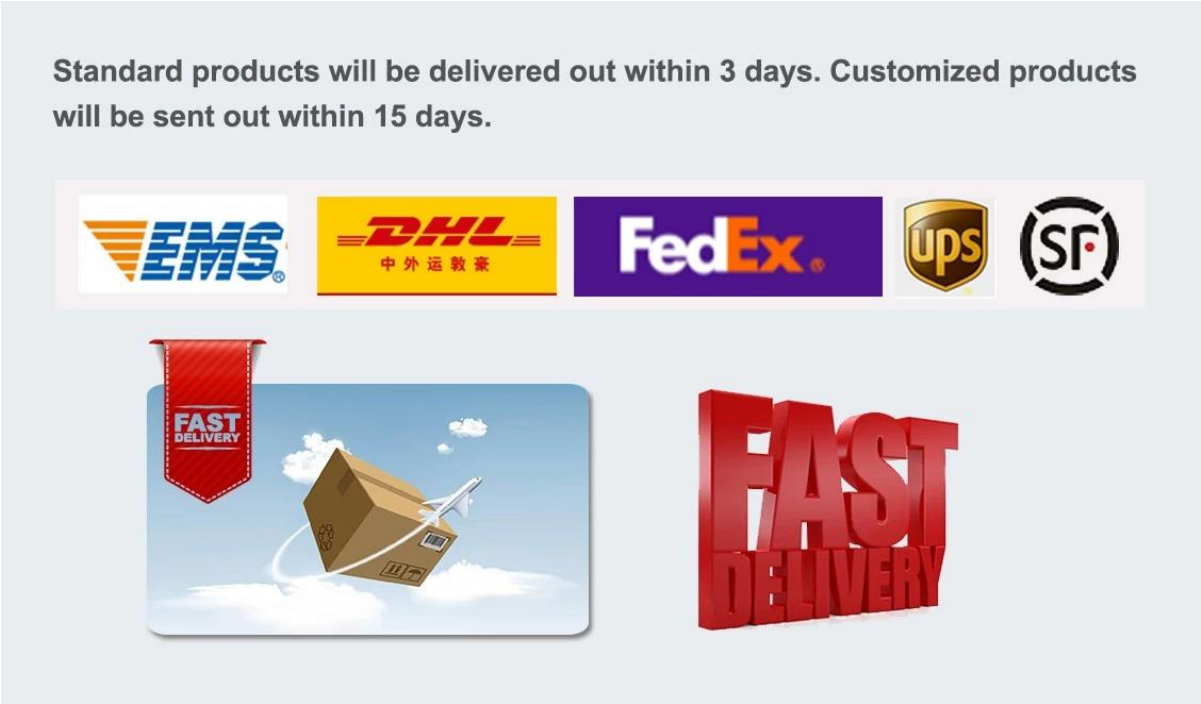
Standard products will be delivered out within 3 days. Customized products will be sent out within 15 days.
EMS
DHL
中外运敦豪
FedEx
ups
SF
FAST DELIVERY
FAST DELIVERY