□□□

□□	□□
□□	SF-PPA3.1X12-J2.4
□□□	□□
□□	□□
□	SUS304
□□□ □	150g
□□ □□	2.0mm
□	□□
MOQ	1000
□□ □□	□□ □□ □ 15□

□□□ □□□

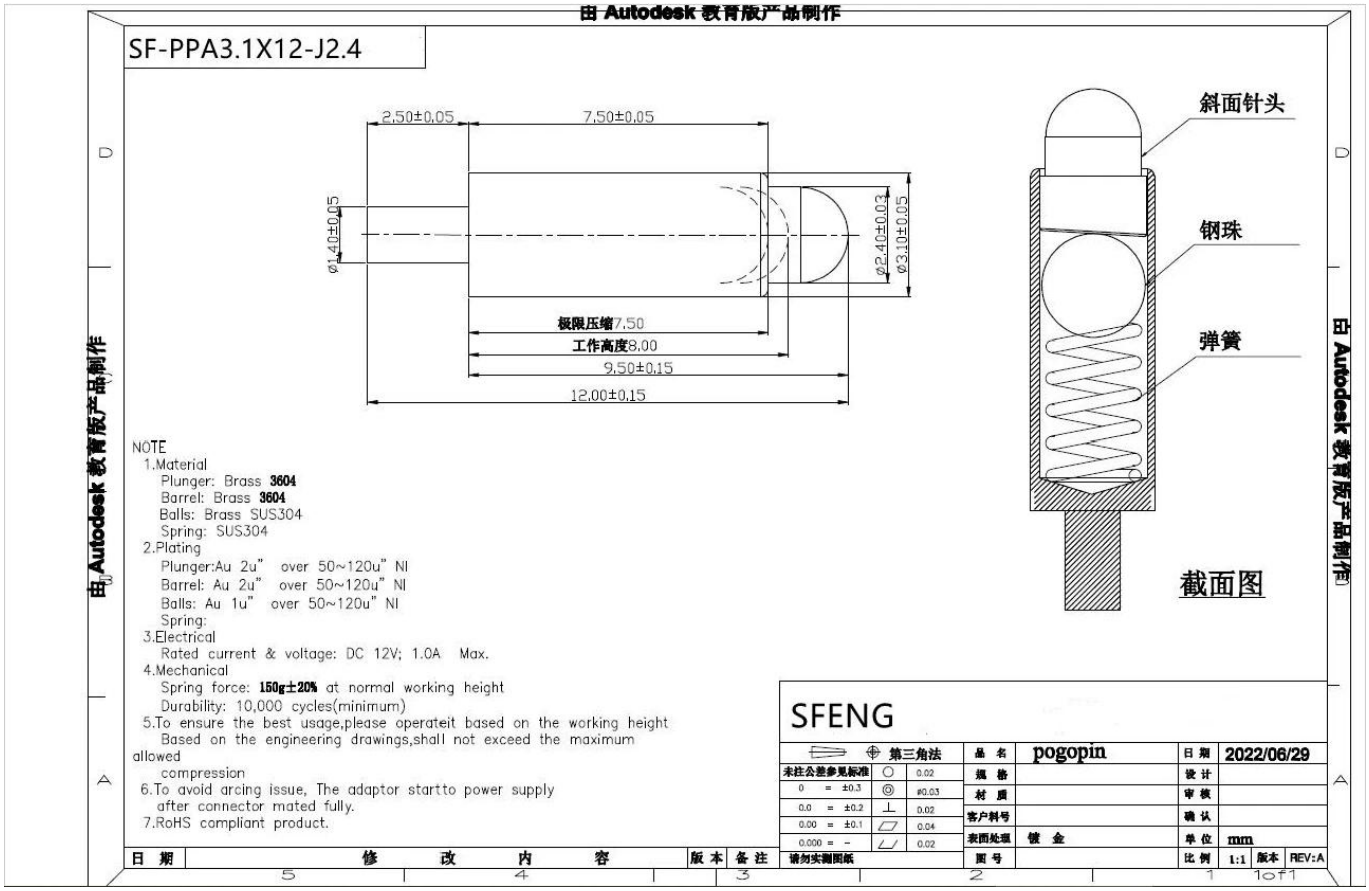

□□ □□

□□ □□

PCB, ICT, FCT □□□□ □□□ □□ □(□□);

□□, □□□□, □□□, □□□ □ □□□□ □□ □ □□ □□ □□ □□ □□□ □□□ □□□□ □□ □□□ □(□□□); □□ □□ □□ □□□□;

BGA □ □□□ □□□ □□□ □□□;

□□ □ □□□ □□, □□□ □□, LM □ QZ □ VZ □□□;

□□□ □□□, □□□ □□□, □□□□ □□;

□□ □ □□□; □□/□□;

□□ □□ □□□□, 30# OK□□, □□□, POM, □□□ □

□□ □□

1. Raw material warehouse

2. Lathe workshop

3. Assemble workshop

4. Quality inspection

5. Finished products

6. Packing

□□□ □□

1. Agilent current testing

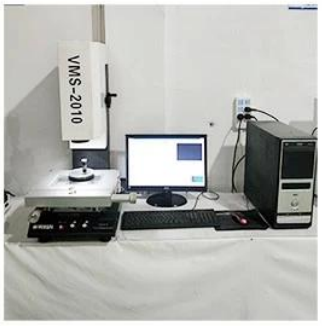

2. Quadratic element

3.Load Curve Meter

4.Bond Test

5.Life Fatigue Test

6.Microscope

□□ & □□

Standard products will be delivered out within 3 days. Customized products will be sent out within 15 days.