□□ □□

□□ □□	SF-PPA8.0*22-G
□□	□□: □□, Au on Ni □□ □□□: Becu, Au on Ni □□ □: SWP
□□	8.0*22
□□□□	1200g
□□□	10□□□
□□	<10mΩ
MOQ	100PCS
□□	T/T
□□ □□	□□□ □□ □ 5-10□

□□ □□

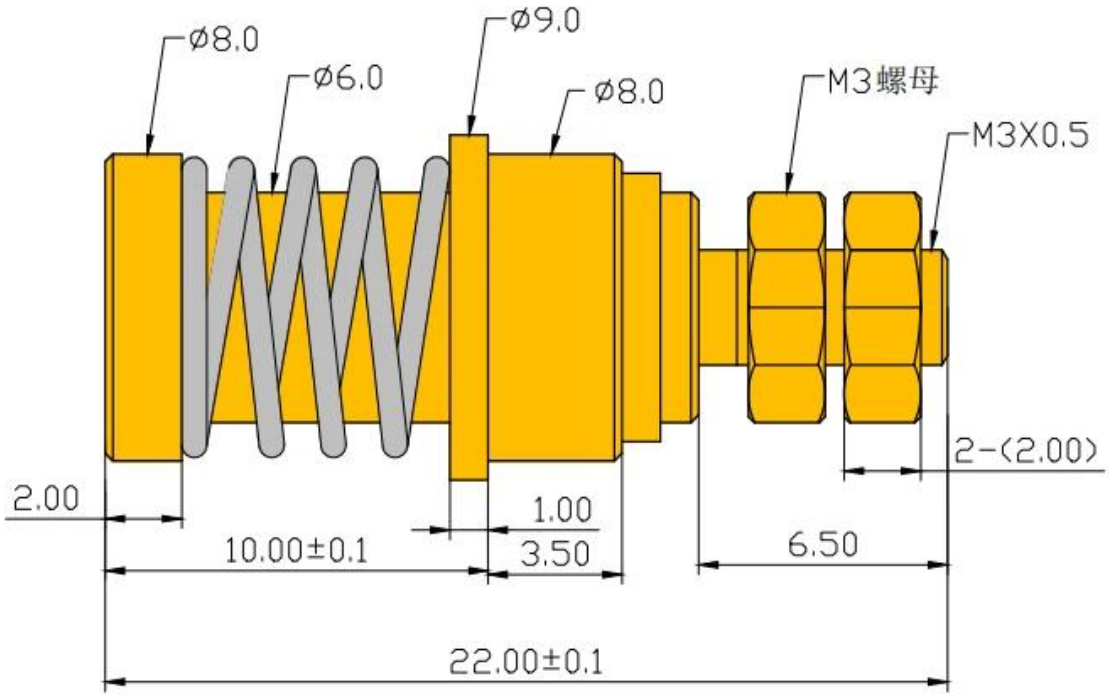

□□ □□

Production Flow (生产流程)

SFENG
The China's The World's

1. raw material warehouse

2. Lathe workshop

3. Assemble workshop

4. Quality inspection

5. Finished products

6. Packing

Measuring Equipment

Measuring Equipment:

1. Agilent current testing;
2. Quadratic element measurement
3. Load Curve Meter
4. Bond Test
5. Life Fatigue Test

□□ □□

1. PCB, ICT, FCTtesting □□ □□ □□□ □□ □(□□);
2.Pogo'□(□□□) to'setup'connection between two'printed'circuit'boards' for'charging,locating,locating,battery,semiconductor&interconnector'applications;
3.'BGA' □ '□□□' □□□□ □□ □□'□□□'
4.Universal'pin'without'spring,coating'pin,LM'pin'with'QZ'and'VZ'series;
5. □□□ □□□, □□□ □□□, □□□□□ □□;
6.Terminal&receptacle/socket;
7. □□ □□ □□ □□, □□□, POM □

□□□ □□ □□□□ □□ □□ '□□□□' □□□ □□□ □□ □□□ '□□□□'□ □□□□□ □□ □□□ □□□□□□.

□□ □□□

□□□ □□□

1. □□□ 24□□ □□ □□ □□□ □□□ □□□ □□□ □ □□□□.
2.Customized'design'□'available'□□'OEM'□'□□□□□.
3.□□□ □□□ □□□□ □ □□ □□□□ □□□ □□ □□□ □ □□□□.
4. □□□ □□□□ '□□□' □□□ '□□' □□□□ □□□ □ □□□□.