FCT test probe pin SF-PH101-B3

Suzhou Shengteng Electronic Co.,Ltd is specializing in the spring probe&the pogo pin with high quality,low price and fast delivery.We have our own brand,we always devote ourselves to achieving international standards,our company have passed the ISO9001-2008 quality managements certification and our products are qualified of RoHs.

FCT test probe pin product drawing

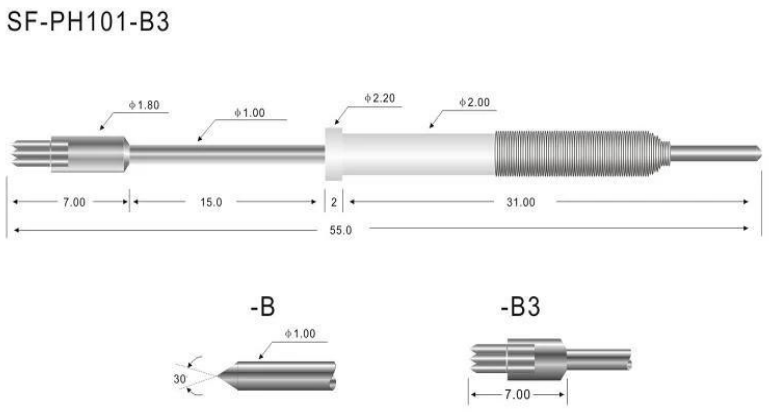

Our company main products

---Spring loaded pin(single) for PCB,ICT,FCT testing,etc;
---Pogo pin(connector) to establish a(usually temporary)connection between two printed circuit boards for charging, locating, Battery, Semiconductor & interconnect Applications;
---Double ended probe for BGA&semiconduction testing;
---Universal pin without spring,coating pin,LM pin with QZ&VZ series;
---High current probe,Switch probe,Capacitance needle...
---Terminal&receptacle/socket;
---Other related electronic components,30#OK wire,Jig locks,POM,etc

FCT test probe pin warehouse