Product Name:SF-pogo pin

Material and finishes

Plunger:Be Cu,Rh plated
Barrel:Brass,Gold plated
Spring:Stainless steel

Pictures

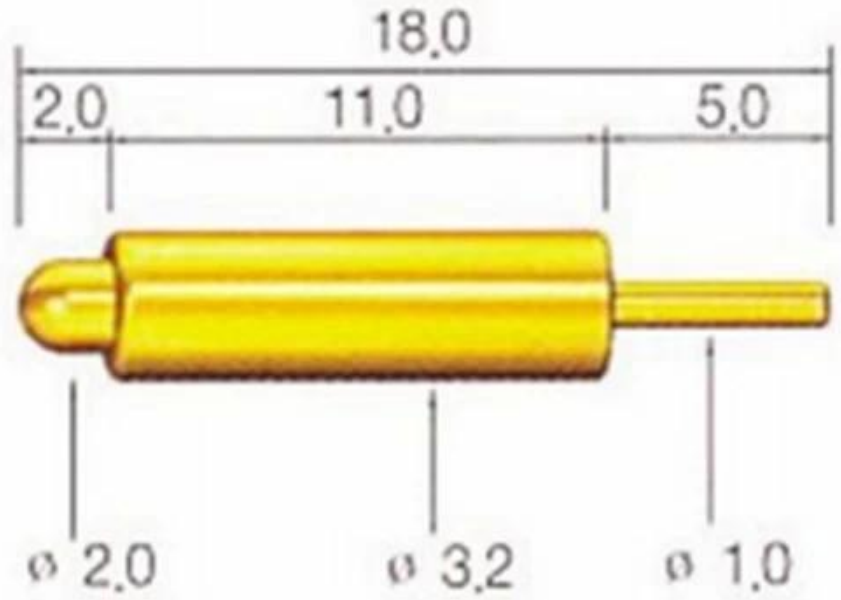

• Any tips,we could provide for you
• If you are interested in it,pls contact me

ShengFeng Probe

Our company established in 1984,Shengfeng Probe,the register name of Suzhou Shengteng Electronic Co.,Ltd,specializing in the

spring probe & the pogo pin &Terminal block with good quality,fast delivery and best service.

Our Advantages

1.we have 30 years experience in probe pin and have ourself factory.
2.we provide free sample and have a testing department.
3.we could manufacture products as your request.
4.we guarantee best price and good service.

Our factory

Our equipment

Spring exhausted tester	DC power supply	Current resistance tester
Microscope	Tensile strength tester	Spring tester
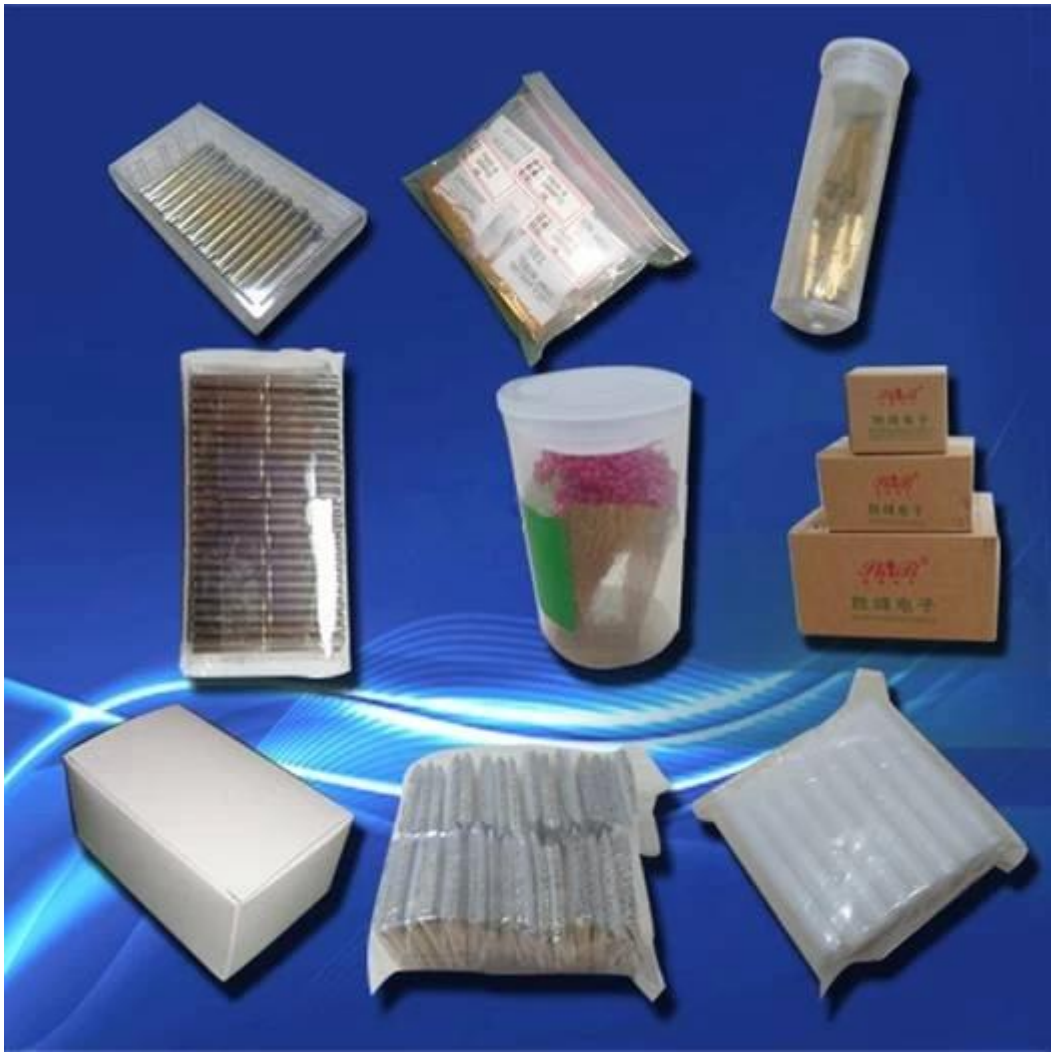
Our package