Product specifications

Item number	SF6979
Full stroke	≥9mm
Spring force	Current pin:2000g±15% load 5mm Voltage pin:600±15% load 2mm
Customize support	OEM & ODM
MOQ	100PCS
Package	Plastic bag,carton box
Payment	100% T/T before shipment
Delivery time	5-10days after receiving the payment

Product Pictures

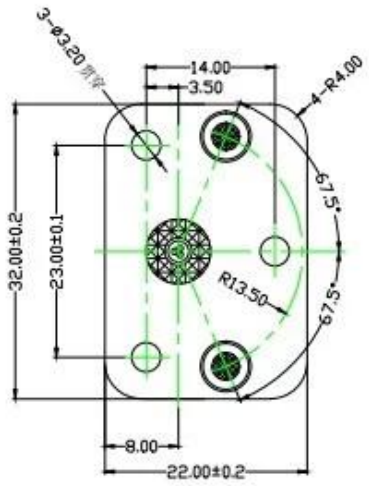

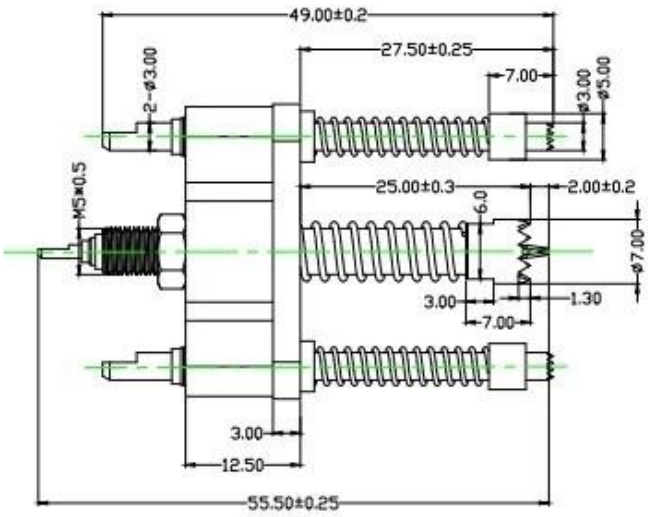

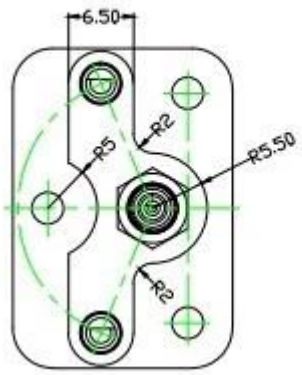

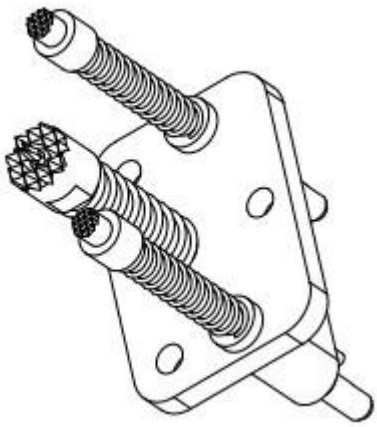

Production Flow

Testing Equippment

Packing

Main products

1.Spring loaded pin(single)for PCB,ICT,FCTtesting etc;
2.Pogo pin(connector)to establish connection between two printed circuit boards for charging,locating,battery,semiconductor&interconnector applications;
3.Double ended probes for BGA and semiconductor testing;
4.Universal pin without spring,coating pin,LM pin with QZ and VZ series;
5.High current probe,switch probe,capacitance needdle;
6.Terminal&receptacle/socket;
7.Other related electronic components,Jig locks,POM and etc.
Whatever you want,please contact us without hesitation ,and we will try our best to meet your requirement within our capability.

Our service

1.We can reply your inquiry within 24 working hours;
2.Customized design is availble and OEM are welcomed;
3.We can deliver the probe pins to our clients all over the world with speed and precision.
4.We can provide the lowest price with high quality products to our clients.