Specifications

Brand	SFENG
Model	SF-m4x33-A
Plunger	/
Body	Brass
Spring	SUS
Spring force	250g
Working travel	4.0mm
Plated	Gold plated
Current Resistance	
Spacing	/
Mounting dimensions	/
MOQ	1000
delivery time	15 Days after confirming order

Customized probe pin Image

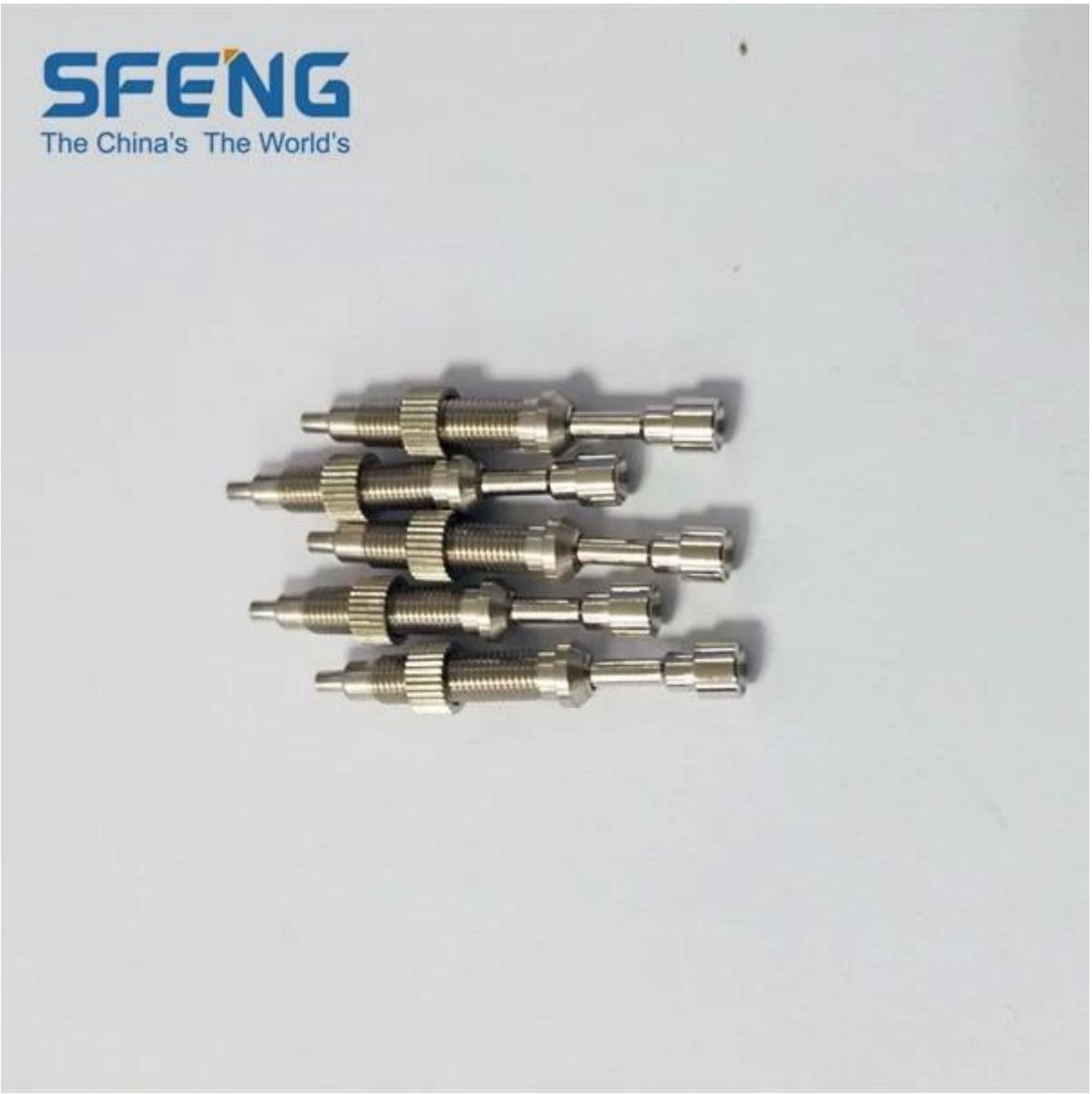

Customized probe pin drawing

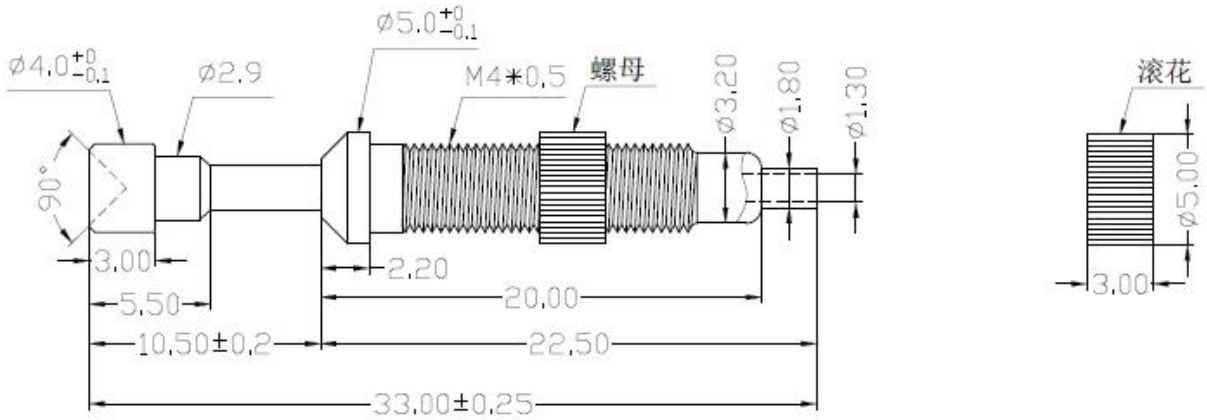

our service

1. Quick response.

2. Customized is accepted.

3. Short production time and fast delivery.

4. High quality and good price.

Main products

Spring-loaded pin (single) of PCB, ICT, FCT testing;

Spring pin (connector) to establish a connection between two printed circuit boards for charging, positioning, batteries, semiconductors and amplifiers; interconnect applications;

BGA and semiconductor test double-ended probe;

Universal pin no spring, paint needle, LM pin QZ and VZ series;

High current probe, the probe switches, capacitors needle;

Pier and amplifier; socket / socket;

Other related electronic components, 30 # OK line, jig lock, POM, iron hinges, etc.

Production process

1. Raw material warehouse

2. Lathe workshop

3. Assemble workshop

4. Quality inspection

5. Finished products

6. Packing

Testing equipment

Packing & delivery
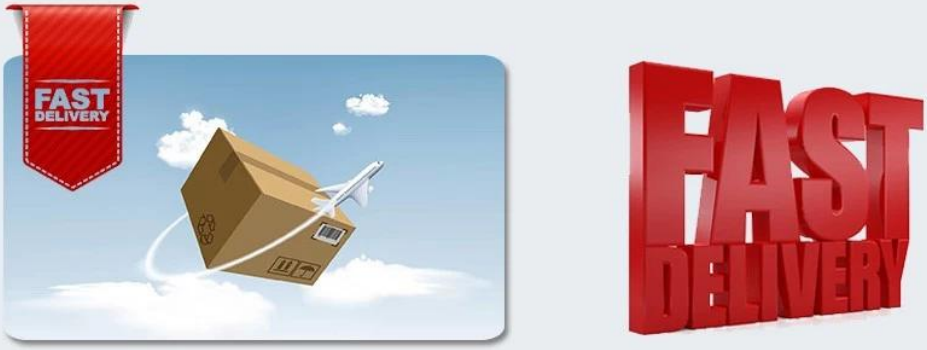
Standard products will be delivered out within 3 days. Customized products will be sent out within 15 days.