Product Name:SF-probe pin

Material and finishes

Plunger:Be Cu,Rh plated
Barrel:Brass,Gold plated
Spring:Stainless steel

Pictures

SFENG
The China's The World's

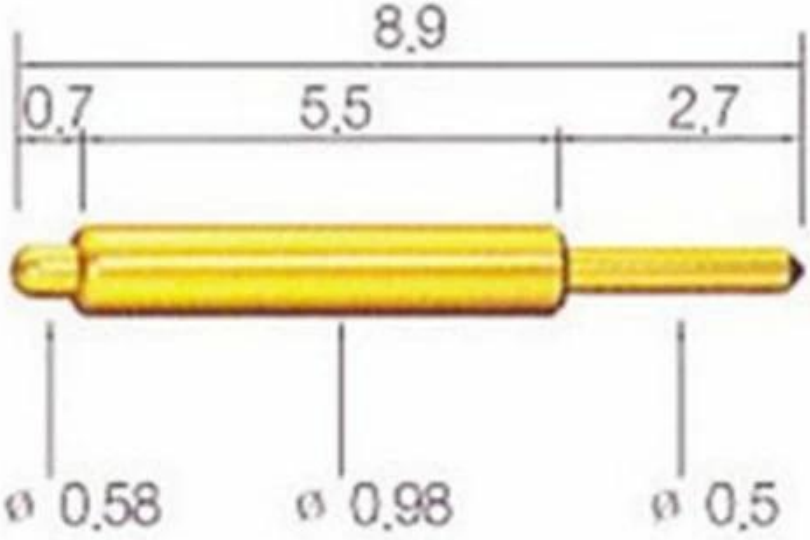

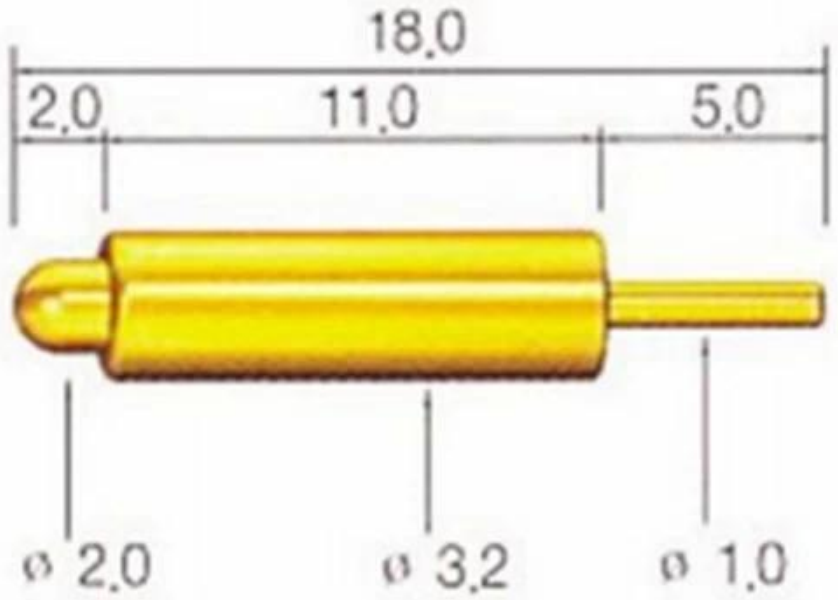

• Any tips,we could provide for you
• If you are interested in it,pls contact me

ShengFeng Probe

Our company established in 1984,Shengfeng Probe,the register name of Suzhou Shengteng Electronic Co.,Ltd,specializing in the

spring probe & the pogo pin &Terminal block with good quality,fast delivery and best service.

Our Advantages

1.we have 30 years experience in probe pin and have ourself factory.
2.we provide free sample and have a testing department.
3.we could manufacture products as your request.
4.we guarantee best price and good service.

Our factory

Our equipment

Measuring Equipment

Measuring Equipment:

1. Agilent current testing;
2. Quadratic element measurement
3. Load Curve Meter
4. Bond Test
5. Life Fatigue Test

Our package

SFENG
The China'S The World's
限十层
向上
轻放
怕湿