Product description

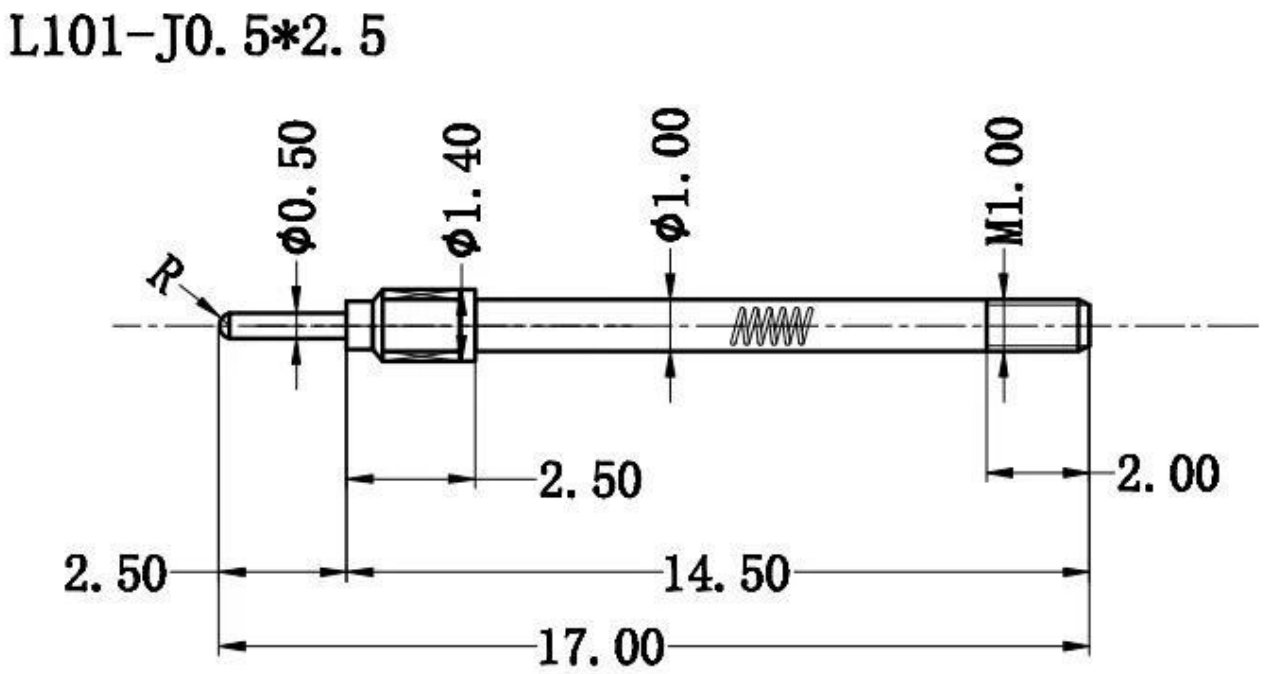

Company introduction

Suzhou Shengyifurui Electronic Technology Co.,Ltd is the leading probe pin supplier in China. We set up a large production plant in Cixi City, Zhejiang Provincein 1984. The monthly production amount reaches 300,000 units and all orders can be finished w ithin 15 working days. The factory has set up I S O 9 0 0 0 1 quality management system.

Company established domestic and international sales department in Suzhouin 2010. It is dedicated to provide professional products and convenient services to the clients a ll over the world.the products lines include
spring pin, pogo pin, switch pin, current pins and accessories. They are widely used in PCB, IC T, SMT, IC industries. Thequality has reached international advanced level and won the high praise in theprobe indus

Our main products

1. PCB,ICT,FCT testing pins
2. pogo pin connectors
3. Lithium battery's charge and discharge
4. customized pins

Production Flow

Production Flow (生产流程)

SFENG
The China's The World's

1. raw material warehouse

2. Lathe workshop

3. Assemble workshop

4. Quality inspection

5. Finished products

6. Packing

Measuring Equipment

Measuring Equipment

Measuring Equipment:

1. Agilent current testing;
2. Quadratic element measurement
3. Load Curve Meter
4. Bond Test
5. Life Fatigue Test