Spring Loaded PCB Guide Pin SF-GP4.0x36

Product Spec

Brand	SFENG
Material	Barrel: Brass, Ni plated Plunger: Brass, Ni plated Spring: SUS
Full stroke	10mm
Spring force	350g
Production lead time	7-15days

Product Drawing

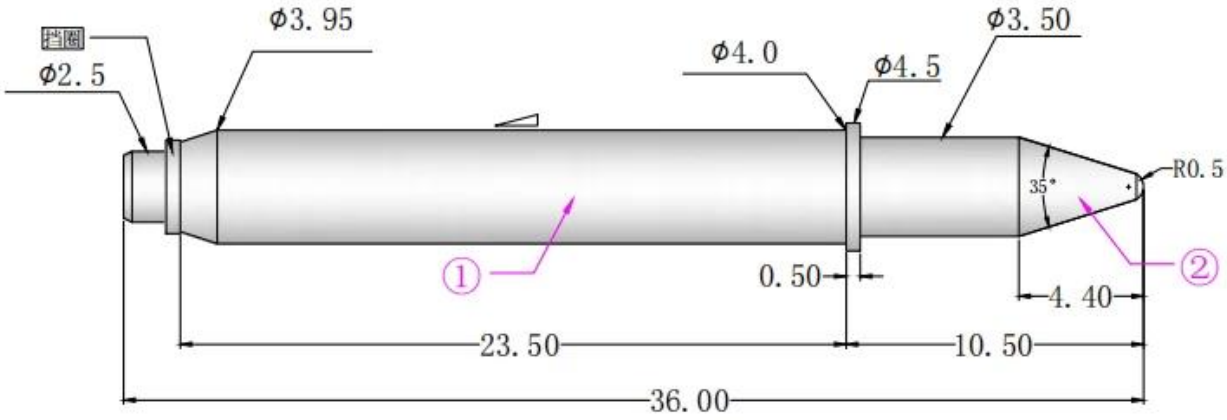

Product Image

SFENG
The China's The World's

Factory Image

Production Flow

Production Flow (生产流程)

SFENG
The China's The World's

1. raw material warehouse

2. Lathe workshop

3. Assemble workshop

4. Quality inspection

5. Finished products

6. Packing

FAQ

FAQ

1. What is terms of SFENG payment?

Usually, we require 100% payment before delivery. You can choose Wire transfer and Pay Pal. The currency we accept are USD dollar, Japanese Yuan and RMB. Payment term is negotiable for special order.

2. What is the lead time of orders?

SFENG can send standard probes products out within 3 days. For customized products, the lead time is 15-20 days depending on order quantity.

3.How does SFENG control product quality?

SFENG have skilled QC team and professional testing equipment. From raw material to finished products, we have complete checking process. Only approved products are allowed to deliver to customer.

4. Can customized products be accepted?

Yes, one biggest advantage of SFENG is product customization. Just telling us the parameter and function you need, our professional engineer will design product specially for you.

5.How does SFENG hand in case of a compliant?

Compliant seldom happen. Usually, we will find root case and take corrective measure within one week since receiving defective samples.