Specifications

Brand	SFENG
Model	Spring loaded pogo pin
Plunger	Brass
Body	Brass
Spring	Stainless steel
Spring force	Customized
Full travel	Customized
Switch path	Customized
Current Resistance	NO
Spacing	NO
Mounting dimensions	NO
MOQ	100
delivery time	15 Days after confirming order

Pogo pin Image

SFENG
The China's The World's

SFENG
The China's The World's

Pogo pin reel packaging

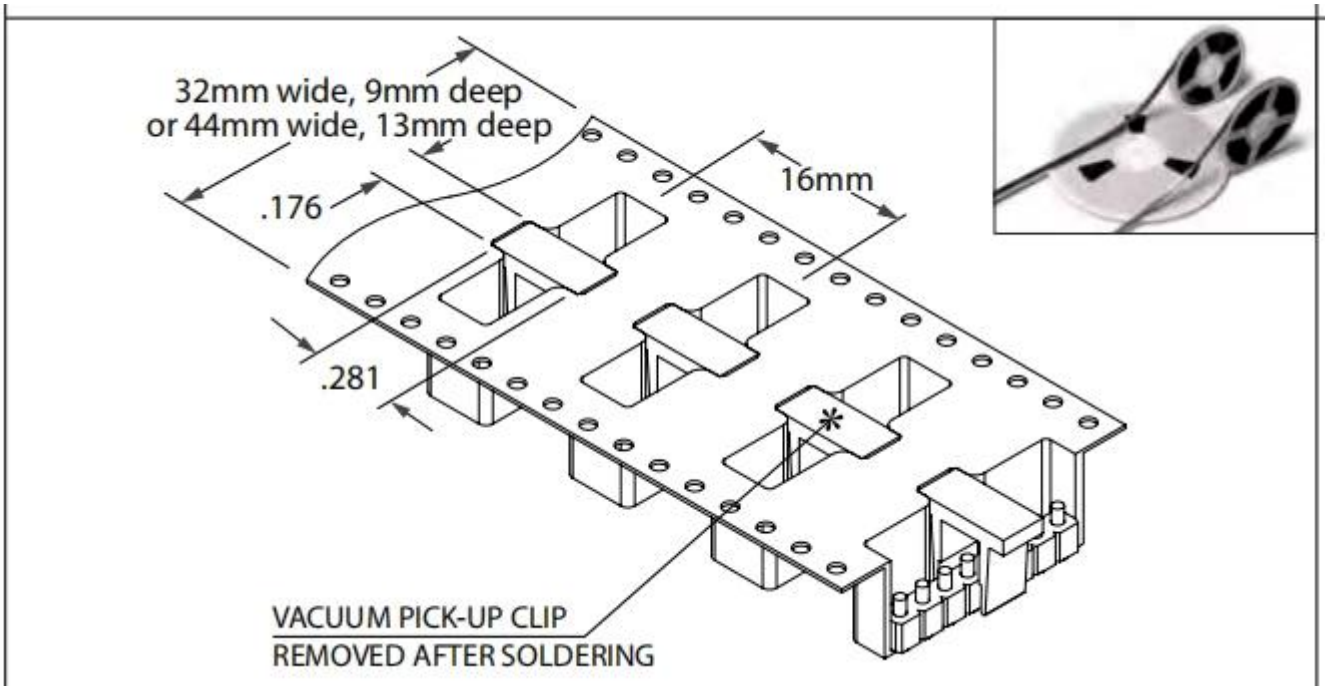

our service

1. Quick response.

2. Customized is accepted.

3. Short production time and fast delivery.

4. High quality and good price.

Main products

Spring-loaded pin (single) of PCB, ICT, FCT testing;

Spring pin (connector) to establish a connection between two printed circuit boards for charging, positioning, batteries, semiconductors and amplifiers; interconnect applications;

BGA and semiconductor test double-ended probe;

Universal pin no spring, paint needle, LM pin QZ and VZ series;

High current probe, the probe switches, capacitors needle;

Pier and amplifier; socket / socket;

Other related electronic components, 30 # OK line, jig lock, POM, iron hinges, etc.

Production process

1. Raw material warehouse

2. Lathe workshop

3. Assemble workshop

4. Quality inspection

5. Finished products

6. Packing

Testing equipment

1. Agilent current testing

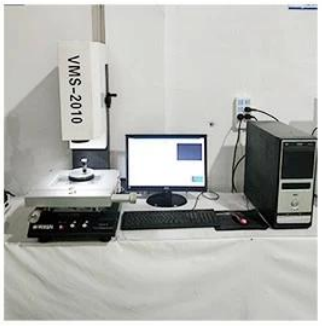

2. Quadratic element

3.Load Curve Meter

4.Bond Test

5.Life Fatigue Test

6.Microscope

Packing & delivery

Standard products will be delivered out within 3 days. Customized products will be sent out within 15 days.