Pino guia PCB com mola SF-GP4.0x36

Especificações do produto

Marca	SFENG
Material	Barril: Latão, banhado a Ni Êmbolo: Latão, banhado a Ni Primavera: SUS
Curso completo	10mm
Força da primavera	350g
Prazo de produção	7-15 dias

Desenho do produto

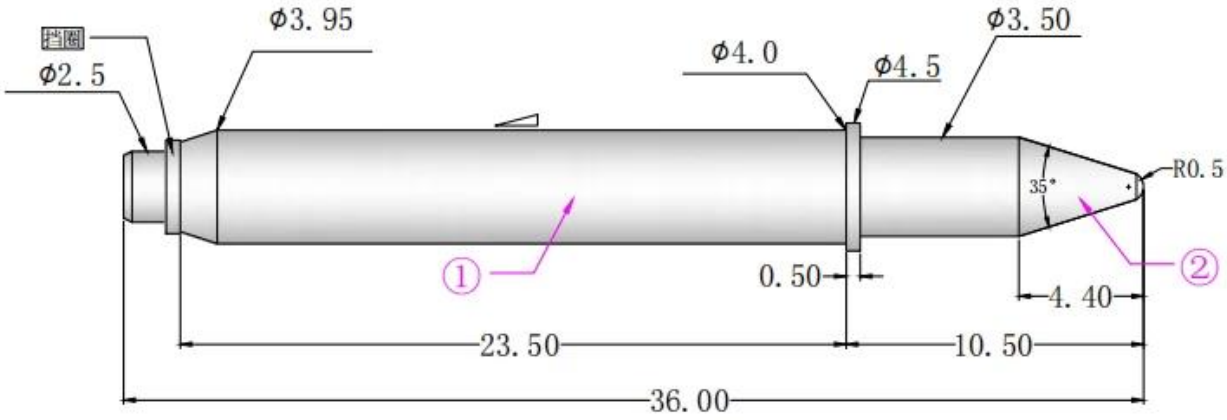

Imagem do Produto

SFENG
The China's The World's

Imagem de fábrica

Fluxo de produção

Perguntas frequentes

FAQ

1. What is terms of SFENG payment?

Usually, we require 100% payment before delivery. You can choose Wire transfer and Pay Pal. The currency we accept are USD dollar, Japanese Yuan and RMB. Payment term is negotiable for special order.

2. What is the lead time of orders?

SFENG can send standard probes products out within 3 days. For customized products, the lead time is 15-20 days depending on order quantity.

3.How does SFENG control product quality?

SFENG have skilled QC team and professional testing equipment. From raw material to finished products, we have complete checking process. Only approved products are allowed to deliver to customer.

4. Can customized products be accepted?

Yes, one biggest advantage of SFENG is product customization. Just telling us the parameter and function you need, our professional engineer will design product specially for you.

5.How does SFENG hand in case of a compliant?

Compliant seldom happen. Usually, we will find root case and take corrective measure within one week since receiving defective samples.